Parts Catalogue

T300/350NC

제 작 일	2008.12
작 성	임 유 정
검 토	강 무 상
승 인	이 종 열

벽산그룹 TYM 동양물산 기계사업부

Printed : 2008/12 Version
Part number of this book: 13219400020

뒷 표 지

TONG YANG MOOLSAN CO., LTD
KTB network B/D 12F, 826-14 Yeoksam-dong, Kangnam-gu,Seoul, 135-080, Korea
Head Office:
TEL: 82-2-3466-3331,FAX:82-2-3466-3386
Factory:
TEL:82-55-279-4346,4379,FAX:82-55-279-4447

Printed :2008/12 Version

Part number of this book: 13219400020

Important tips of Parts Catalogue

We thank you for your purchasing our product, manufactured under strict quality control, by gathering plenty of experiences and new technology, designed for a comport and pleasant work.

1. Part Composition

This catalogue deals with engine and chassis.

Detailed classifications are listed in the following page.

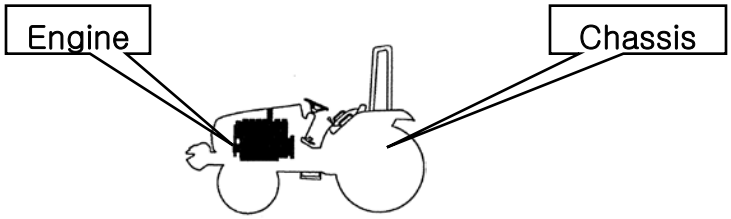

2.For locating parts easily,Please Note:

A.If you know the assembly where the part is used.

-Refer to the relevant figure from the identifying group symbol illustration,

-Locate the relevant chapter

-Refer to the particular chapter desired.

3. For ordering parts

To obtain spare parts please contact your nearest dealer and give him the details listed below.

①Tractor Model : Tractor

②Tractor Serial Number : W050000

③Part Number : 16001032000

④Description : Air cleaner assembly

⑤Quantity required: 1

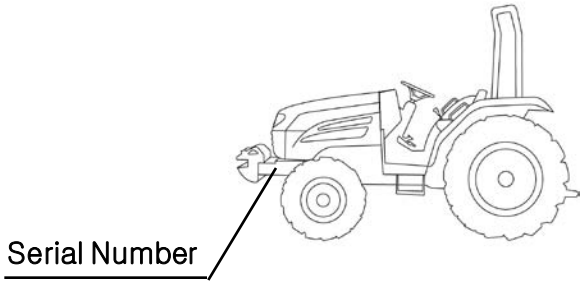

4. For ordering PARTS CATALOGUE

This is Priced item and one is to order the same on part No. 13219400020

This supersedes all our editions.

Note)When replacing parts, please use original spare parts to be sure of the performance and the longer life of the product

※The information in this catalogue may at any time be modified without a prior notice for the improvement of performance, please consult our spare parts dept. for the detailed inquiry.

5. How to use parts catalogue

FIG 201 ②	RADIATOR ③	P1 ④	Year / Month ⑤ 2006 / 06	①

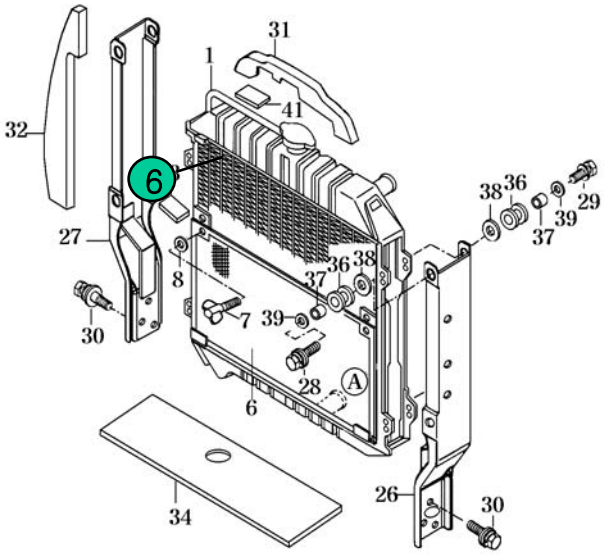

NOTE	⑬

FIG 201 ②	RADIATOR ③	P1 ④	Year / Month ⑤ 2006 / 06	①

KEY NO		PART NO	PART NAME	SPEC	Q'TY	REPAIR	E/G SERIAL NO	REMARKS
023	001	14571042001	RADIATOR SET		1			
023	002	14571042101	RADIATOR SET		1			
023	003	14571042171	SHROUD		1			
023	006	14571042301HB	NET COMP		1			
02 ⑥	07	V271 ⑦ 12	BOLT , WING ⑧	M6X12 ⑨	⑩	⑪	⑫	⑭

NOTE	⑬

① Group Indication ：Indicate the relevant location of the part with a symbol illustration.

② Figure Number: Indicate the relevant section of the machine with a figure number.

③ Section Name ：Indicate the section name of the machine

④ Section Page ：Page number of the section in this catalogue.

⑤ Date：Show the Year/Month of the section made or updated

⑥ Key number : Indicating number of each parts in the illustration.

⑦ Part Number : Unique part number maintained in our system

The part number starting with V or M means it is TYM's standard part

The alphabet at the end of part number means the status of material or the color of paint

Legend : M:Machining, DG:Dark Gray, BR:Bright Red, SW:Summer White, PB:Pure Black, GB:Glossy Black, SR:Super Red, MS:Metallic Silver DD:Heat proof Black, TY: Tangerine Yellow etc.

⑧ Description : Description of a part, Abbreviation means as follows.

- Indicate the mixture condition of a part

ASSY : Assembly with a mixture of several parts, so can be broke up retaining their original form

COMP : Assembly with a mixture of several parts, but can not be broke up retaining their original form

SUB : mean the same as ASSY but used in lower level in aid.

SET : Part consist of ASSY, COMP, and part(s) as a group

- Indicate the location of a part

LH: Left, RH: Right, FR: Front, RR: Rear, UPR: Upper, LOW: Lower

⑨ Type : Type of the standard items like bolt or nut

⑩ Quantity : Total quantity of the part referred to in the page.

Symbol below indicate options. So, show the quantity of each option.

Note) AR means as requested quantity.

⑪ Repair Parts consumption frequency class: indicate the level of a part in aid of stocking spares, anticipating the service requirements.

A :Fast moving part(frequently required)

B :Medium moving part (sometimes required)

C :Slow moving part(rarely required)

⑫ Modification :

Year/Month~ : From which the change starts

~ Year/Month : To which the part installed

⑬ Notes : explain some reference data

⑭ Remark : indicate reference data or abbreviation in the content.

ENGINEERING GROUP INDEX

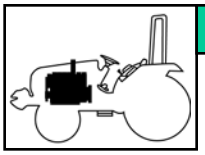
1 ENGINE

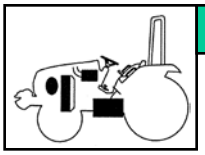
2 ENGINE ACCESSORIES & CONTROL

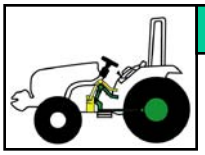
3 CLUTCH,BRAKE,STEERING

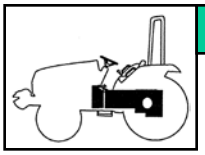
4 TRANSMISSION & REAR AXLE

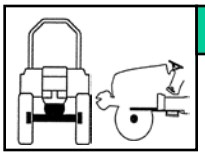
5 FRONT AXLE,SUPPORTER & DRIVE SHAFT

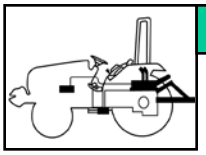
6 HYDRAULICS & 3-POINT LINK

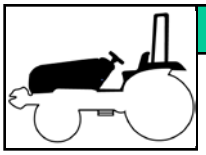
7 SHEET METAL & ROPS

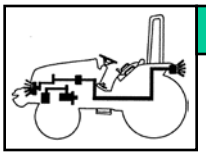
8 ELECTRICALS & HARNESS

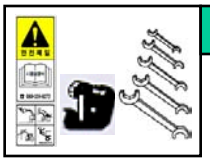
9 WEIGHT,LABEL,TOOLS

067	020	12305180020
077	036	12403160020
036	005	13022250030
037	010	13022250131
041	005	13022250232
046	002	13022250333

10 NUMERICAL INDEX

CONTENTS

ENGINE

1 ENGINE (S4L) PART NO. 1301 101 100 0 ---T300NCUSM

(S4L2) PART NO. 1303 101 100 0 ---T350NCUSM

FIG 101 CYLINDER HEAD----------04
FIG 102 VALVE MECHANISM----------06
FIG 103 ROCKER COVER & CAMSHAFT----------08
FIG 104 CRANK CASE----------10
FIG 105 REAR PLATE & MAIN METAL----------12
FIG 106 TIMING GEAR CASE----------14
FIG 107 OIL PAN----------16
FIG 108 MAIN MOVING PARTS----------18
FIG 109 TIMING GEAR----------20
FIG 110 INLET & EXHAUST SYSTEM----------22
FIG 111 OIL PUMP----------24
FIG 112 OIL SYSTEM----------26
FIG 113 COOLING SYSTEM----------28
FIG 114 FUEL SYSTEM----------30
FIG 115 NOZZLE----------32
FIG 116 FUEL INJECTION PUMP----------34
FIG 117 FUEL FILTER----------36
FIG 118 GOVERNOR----------38
FIG 119 ELECTRIC PARTS----------40
FIG 120 STARTER----------42
FIG 121 ALTERNATOR----------44
FIG 122 CONTROL SYSTEM----------46
FIG 123 INSTRUMENT----------48
FIG 124 OVERHAUL GASKET KIT----------50

CHASSIS

2 ENGINE ACCESSORIES & CONTROL

FIG 201 AIR CLEANER----------56
FIG 202 RADIATOR----------58
FIG 203 MUFFLER----------60
FIG 204 FUEL TANK----------62
FIG 205 ACCELERATOR----------64
FIG 206 FUEL HOSE & FILTER----------66

3 CLUTCH,BRAKE,STEERING

FIG 301 CLUTCH PEDAL----------72
FIG 302 FLYWHEEL & CLUTCH----------74
FIG 303 BRAKE PEDAL----------76
FIG 304 BRAKE----------78
FIG 306 FRONT WHEEL MOUNTING----------80
FIG 307 REAR WHEEL MOUNTING----------82
FIG 308 STEERING WHEEL----------84
FIG 309 STEERING VALVE & PARKING----------86
FIG 310 STEERING CYLINDER----------88

4 TRANSMISSION & REAR AXLE

FIG 401 TRANSMISSION FRONT CASE----------94
FIG 402 INPUT METAL----------96
FIG 403 INPUT GEAR----------98
FIG 404 4WD DRIVE GEAR----------100
FIG 405 MAIN CHANGE GEARS & REVERSE GEARS----------102
FIG 406 SUB CHANGE GEARS----------104
FIG 407 PINION GEARS----------106

FIG 408 P.T.O DRIVE SHAFT----------108
FIG 409 P.T.O CHANGE GEARS----------110
FIG 410 DIFF LOCK----------112
FIG 411 TRANSMISSION REAR CASE----------114
FIG 412 REAR AXLE HOUSINGS (1)----------116
FIG 413 REAR AXLE HOUSINGS (2)----------118
FIG 414 MAIN CHANGE LEVER----------120
FIG 415 SUB CHANGE LEVER----------122
FIG 416 REVERSE LINK----------124
FIG 418 4WD CHANGE LEVER----------126

5 FRONT AXLE

FIG 501 FRONT AXLE BRACKET----------132
FIG 502 FRONT DIFFERENTIAL GEARS & SHAFT----------134
FIG 503 FRONT AXLE HOUSING----------136
FIG 504 FRONT GEAR CASE (1)----------138
FIG 505 FRONT GEAR CASE (2)----------140

6 HYDRAULICS & 3-POINT LINK

FIG 601 GEAR PUMP----------146
FIG 602 CYLINDER CASE----------148
FIG 603 LIFT ARM----------150
FIG 604 CYLINDER----------152
FIG 605 POSITION LINK (1)----------154
FIG 606 POSITION LINK (2)----------156
FIG 607 CONTROL VALVE----------158
FIG 608 POSITION LEVER----------160
FIG 609 HYDRAULIC PIPE (1)----------162
FIG 610 HYDRAULIC PIPE (2)----------164
FIG 611 EXTERIOR HYD.VALVE----------166

FIG 612 3-POINT LINK----------168
FIG 613 HITCH & COVER----------170

7 SHEET METAL & R.O.P.S

FIG 701 HOOD (1)----------176
FIG 702 HOOD (2)----------178
FIG 703 SIDE COVER----------180
FIG 704 FENDER & REAR FRAME----------182
FIG 705 DASHPANEL----------184
FIG 706 FLOOR PANEL----------186
FIG 707 SEAT----------188
FIG 708 FRONT & REAR MOUNTING----------190
FIG 709 ROPS----------192

8 ELECTRICALS & HARNESS

FIG 801 BATTERY & MOUNTING----------198
FIG 802 LAMP----------200
FIG 803 INSTRUMENT PANEL----------202
FIG 804 ELECTRIC SYSTEM----------204
FIG 805 HARNESS ----------206

9 WEIGHT,LABEL,TOOLS

FIG 901 TOOL & ACCESSORY----------212
FIG 902 LABEL----------214
FIG 902 LABEL----------216

10 NUMERICAL INDEX

ENGINE----------221
CHASSIS----------224

엔진(ENGINE)

1 ENGINE (S4L) PART NO. 1301 101 100 0 ---T300NCUSM
(S4L2) PART NO. 1303 101 100 0 ---T350NCUSM

FIG 101 CYLINDER HEAD----------04
FIG 102 VALVE MECHANISM----------06
FIG 103 ROCKER COVER & CAMSHAFT----------08
FIG 104 CRANK CASE----------10
FIG 105 REAR PLATE & MAIN METAL----------12
FIG 106 TIMING GEAR CASE----------14
FIG 107 OIL PAN----------16
FIG 108 MAIN MOVING PARTS----------18
FIG 109 TIMING GEAR----------20
FIG 110 INLET & EXHAUST SYSTEM----------22
FIG 111 OIL PUMP----------24
FIG 112 OIL SYSTEM----------26
FIG 113 COOLING SYSTEM----------28
FIG 114 FUEL SYSTEM----------30
FIG 115 NOZZLE----------32
FIG 116 FUEL INJECTION PUMP----------34
FIG 117 FUEL FILTER----------36
FIG 118 GOVERNOR----------38
FIG 119 ELECTRIC PARTS----------40
FIG 120 STARTER----------42
FIG 121 ALTERNATOR----------44
FIG 122 CONTROL SYSTEM----------46
FIG 123 INSTRUMENT----------48
FIG 124 OVERHAUL GASKET KIT----------50

CHASSIS

2 ENGINE ACCESSORIES & CONTROL

FIG 201 AIR CLEANER----------56
FIG 202 RADIATOR----------58
FIG 203 MUFFLER----------60
FIG 204 FUEL TANK----------62
FIG 205 ACCELERATOR----------64
FIG 206 FUEL HOSE & FILTER----------66

3 CLUTCH,BRAKE,STEERING

FIG 301 CLUTCH PEDAL----------72
FIG 302 FLYWHEEL & CLUTCH----------74
FIG 303 BRAKE PEDAL----------76
FIG 304 BRAKE----------78
FIG 306 FRONT WHEEL MOUNTING----------80
FIG 307 REAR WHEEL MOUNTING----------82
FIG 308 STEERING WHEEL----------84
FIG 309 STEERING VALVE & PARKING----------86
FIG 310 STEERING CYLINDER----------88

4 TRANSMISSION & REAR AXLE

FIG 401 TRANSMISSION FRONT CASE----------94
FIG 402 INPUT METAL----------96
FIG 403 INPUT GEAR----------98
FIG 404 4WD DRIVE GEAR----------100
FIG 405 MAIN CHANGE GEARS & REVERSE GEARS----------102
FIG 406 SUB CHANGE GEARS----------104
FIG 407 PINION GEARS----------106
FIG 408 P.T.O DRIVE SHAFT----------108
FIG 409 P.T.O CHANGE GEARS----------110
FIG 410 DIFF LOCK----------112
FIG 411 TRANSMISSION REAR CASE----------114
FIG 412 REAR AXLE HOUSINGS (1)----------116
FIG 413 REAR AXLE HOUSINGS (2)----------118
FIG 414 MAIN CHANGE LEVER----------120
FIG 415 SUB CHANGE LEVER----------122
FIG 416 REVERSE LINK----------124
FIG 418 4WD CHANGE LEVER----------126

5 FRONT AXLE

FIG 501 FRONT AXLE BRACKET----------132
FIG 502 FRONT DIFFERENTIAL GEARS & SHAFT----------134
FIG 503 FRONT AXLE HOUSING----------136
FIG 504 FRONT GEAR CASE (1)----------138
FIG 505 FRONT GEAR CASE (2)----------140

6 HYDRAULICS & 3-POINT LINK

FIG 601 GEAR PUMP----------146
FIG 602 CYLINDER CASE----------148
FIG 603 LIFT ARM----------150
FIG 604 CYLINDER----------152
FIG 605 POSITION LINK (1)----------154
FIG 606 POSITION LINK (2)----------156
FIG 607 CONTROL VALVE----------158
FIG 608 POSITION LEVER----------160
FIG 609 HYDRAULIC PIPE (1)----------162
FIG 610 HYDRAULIC PIPE (2)----------164
FIG 611 EXTERIOR HYD.VALVE----------166
FIG 612 3-POINT LINK----------168
FIG 613 HITCH & COVER----------170

7 SHEET METAL & R.O.P.S

FIG 701 HOOD (1)----------176
FIG 702 HOOD (2)----------178
FIG 703 SIDE COVER----------180
FIG 704 FENDER & REAR FRAME----------182
FIG 705 DASHPANEL----------184
FIG 706 FLOOR PANEL----------186
FIG 707 SEAT----------188
FIG 708 FRONT & REAR MOUNTING----------190
FIG 709 ROPS----------192

8 ELECTRICALS & HARNESS

FIG 801 BATTERY & MOUNTING----------198
FIG 802 LAMP----------200
FIG 803 INSTRUMENT PANEL----------202
FIG 804 ELECTRIC SYSTEM----------204
FIG 805 HARNESS ----------206

9 WEIGHT,LABEL,TOOLS

FIG 901 TOOL & ACCESSORY----------212
FIG 902 LABEL----------214
FIG 902 LABEL----------216

10 NUMERICAL INDEX

ENGINE----------221
CHASSIS----------224

FIG 101 T300/350NC	CYLINDER HEAD	P1	Year / Month 2008 / 12	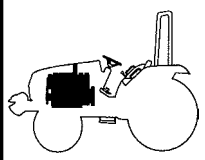

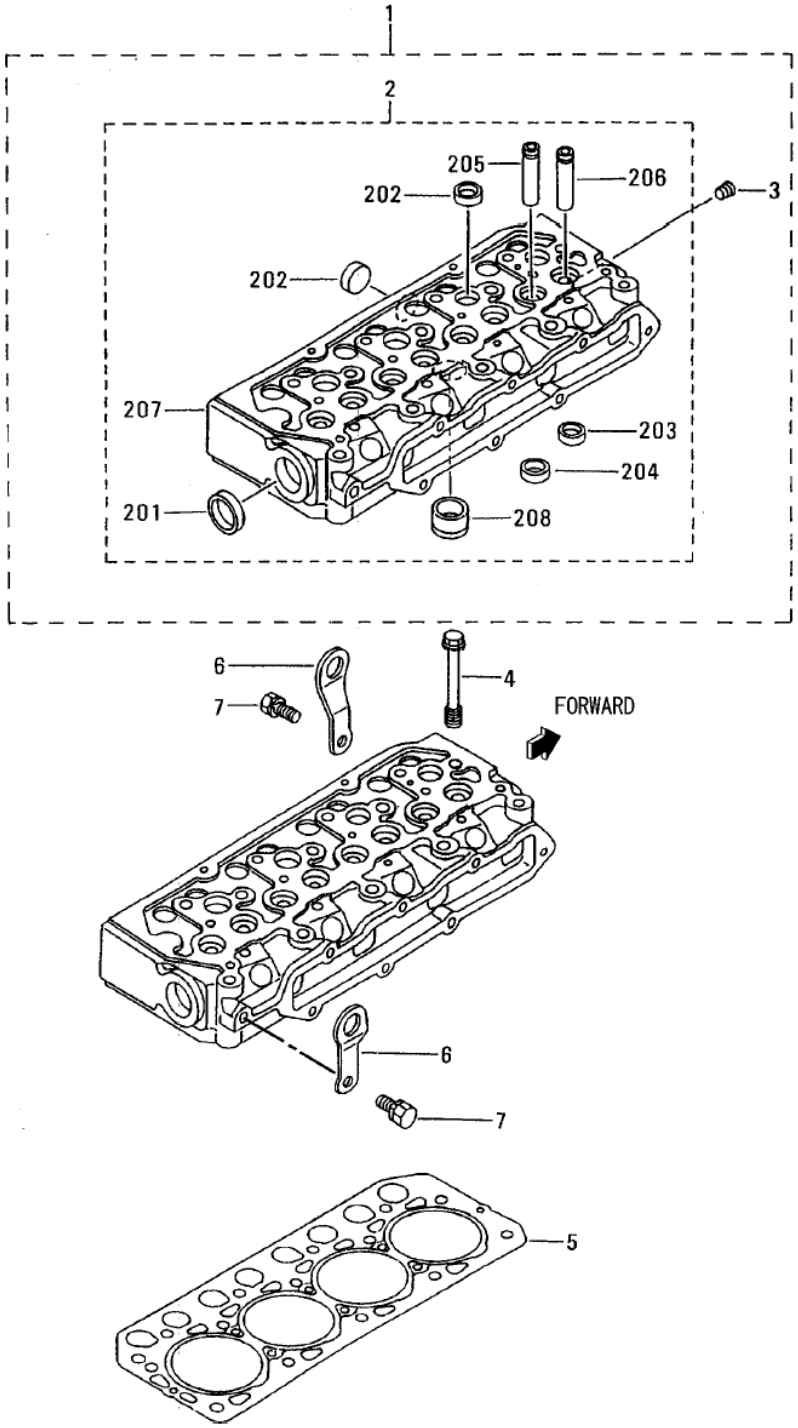

NOTE	S4L(FOR 331),S4L2(FOR 335)

FIG 101 T303NC / T353NC	CYLINDER HEAD	P1	Year / Month 2008 / 12	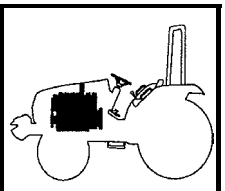

KEY NO.		PART NO.	DESCRIPSTION	SPEC.	QTY.		REPAIR	ENG.SERIAL NO.	REMARKS
					S4L	S4L2			
101	001	31A01-15011	HEAD ASSY,CYLINDER		1	-	C		
101	001	31A01-15021	HEAD ASSY,CYLINDER		-	1	C		
101	002	*	HEAD SUB ASSY,CYL		1	1			
101	00201	MD000245	CAP,SEALING		1	1	B		
101	00202	MF665538	CAP,SEALING		7	7	B		
101	00203	*	SEAT,VALVE,INLET		4	4			
101	00204	*	SEAT,VALVE,EXHAUST		4	4			
101	00205	31A01-02500	GUIDE,EXHAUST VALVE		4	4	B		
101	00206	31A01-02800	GUIDE,INLET VALVE		4	4	B		
101	00207	*	HEAD,CYLINDER		1	1			
101	00208	31A03-13500	JET,COMBUSTION		4	-			
101	00208	31A03-13600	JET,COMBUSTION		-	4			
101	003	MS661140	PLUG,TAPERED		1	1			
101	004	31A01-11101	BOLT,CYLINDER HEAD		14	14			
101	005	31A01-33300	GASKET,CYLINDER HEAD		1	1	B		
101	006	MM408470	HANGER,ENGINER		2	2			
101	007	MF241280	BOLT,W/WASHER		2	2			

NOTE	S4L(FOR T303) ,S4L2(FOR 353)

FIG 102 T300/350NC	VALVE MECHANISM	P1	Year / Month 2008 / 12	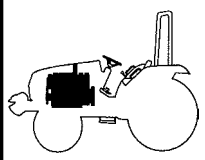

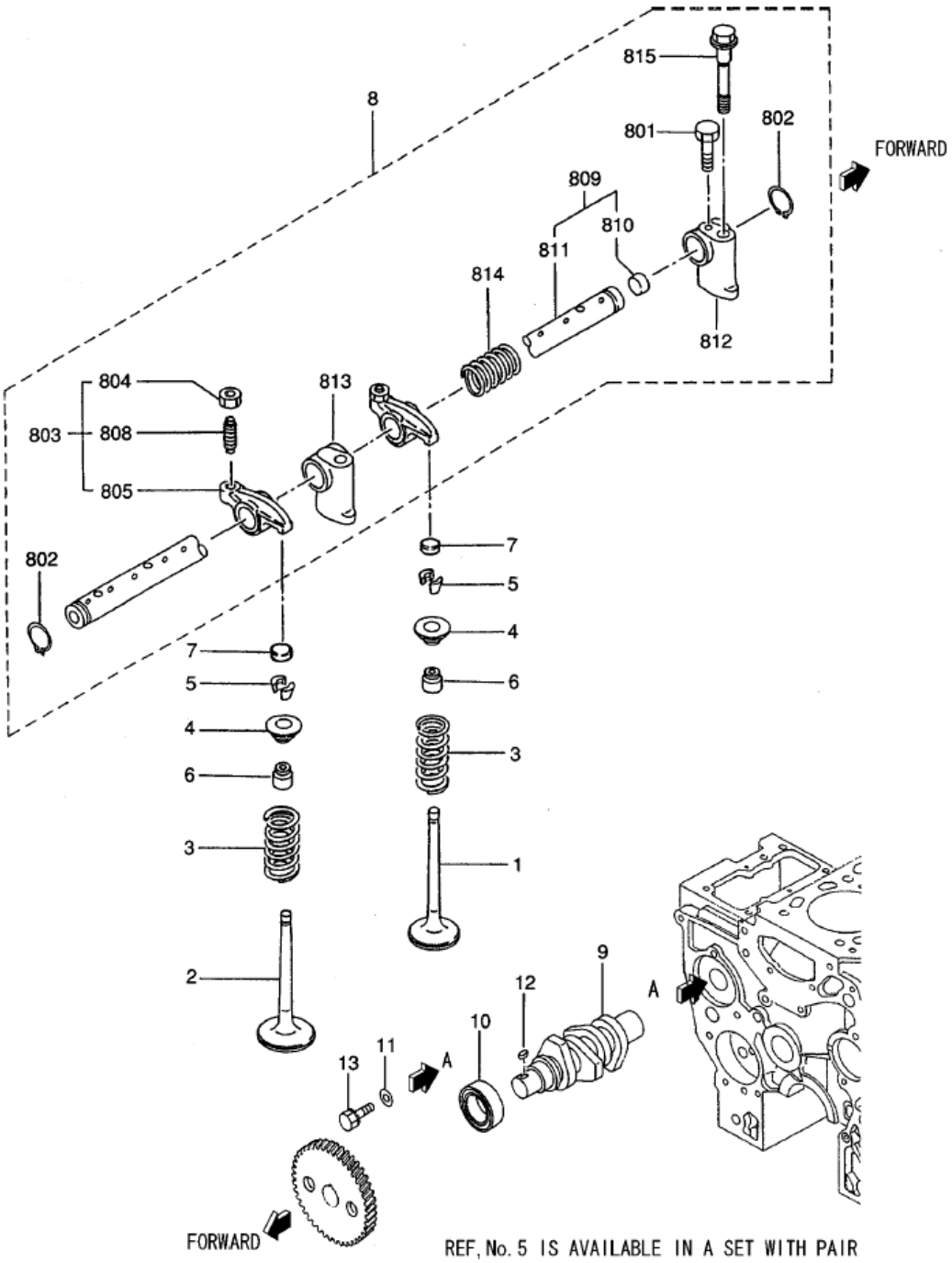

NOTE	S4L(FOR 331),S4L2(FOR 335)

FIG 102 T303NC / T353NC	VALVE MECHANISM	P1	Year / Month 2008 / 12	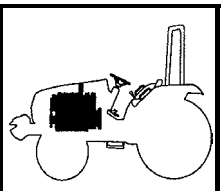

KEY NO.	PART NO.	DESCRIPSTION	SPEC.	QTY.		REPAIR	ENG.SERIAL NO.	REMARKS
				S4L	S4L2			
102 001	31A04-40100	VALVE,INLET		4	4	B		
102 002	31A04-30200	VALVE,EXHAUST		4	4	B		
102 003	31A04-01301	SPRING,VALVE		8	8	A		
102 004	MM433-30601	RETAINER,VALVE STEM		8	8			
102 005	MD016483	VALVE,LOCK		16	16			
102 006	MD115472	SEAL,VALVE STEM		8	8	A		
102 007	31A04-00700	CAP,VALVE		8	8			
102 008	*	ROCKER & SHAFT ASSY		1	1			
102 00801	F1035-05010	BOLT		1	1			
102 00802	MF522010	RING,SNAP		2	2			
102 00803	31A04-11024	ROCKER ASSY		8	8			
102 00804	F2325-08000	NUT,JAM		8	8			
102 00805	*	ROCKER,ARM		8	8			
102 00808	32A04-02401	SCREW,ROCKER		8	8			
102 00809	31A04-21010	SHAFT ASSY,ROCKER		1	1			
102 00810	MD021204	CAP,SEALING		2	2			
102 00811	*	SHAFT,ROCKER		1	1			
102 00812	31A04-34100	BRACKET,ROCKER SHAFT		1	1			
102 00813	31A04-34300	BRACKET,ROCKER SHAFT		3	3			
102 00814	32C04-04501	SPRING,ROCKER		3	3			
102 00815	32C04-06101	BOLT,ROCKER BRACKET		4	4			
102 009	31A65-03090	SHAFT,FUEL INJ PUMP		1	1			
102 010	MD703856	BEARING,RADIAL BALL		1	1	B		
102 011	MD000425	WASHER		1	1			
102 012	MF476018	KEY,SUNK		1	1			
102 013	MF241251	BOLT,W/WASHER		1	1			

NOTE	S4L(FOR T303) ,S4L2(FOR 353)

FIG 103 T300/350NC	ROCKER COVER & CAMSHAFT	P1	Year / Month 2008 / 12	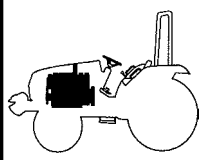

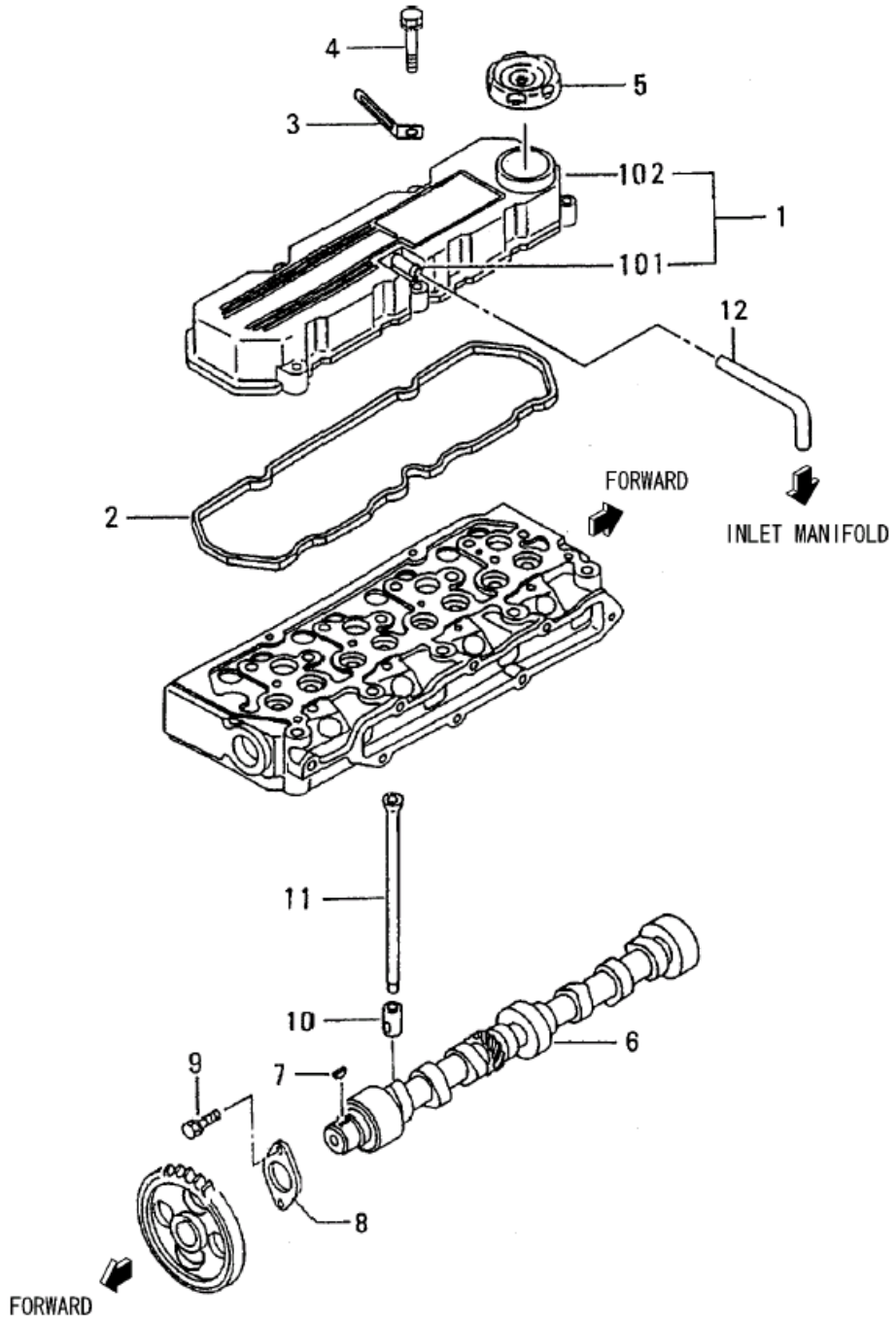

NOTE	S4L(FOR 331),S4L2(FOR 335)

FIG103 T303NC / T353NC	ROCKER COVER & CAMSHAFT	P1	Year / Month 2008 / 12	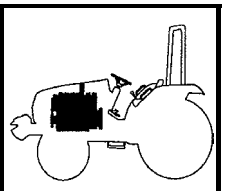

KEY NO.		PART NO.	DESCRIPSTION	SPEC.	QTY.		REPAIR	ENG.SERIAL NO.	REMARKS
					S4L	S4L2			
103	001	31A04-20032	COVER ASSY,ROCKER		1	1	C		
103	00101	*	PIPE		1	1			
103	00102	*	COVER,ROCKER		1	1			
103	002	31A04-33202	GASKET,ROCKER COVER		1	1	B		
103	003	MS470059	CLIP		1	1			
103	004	MF241261	BOLT,W/WASHER		5	5			
103	005	MD008784	CAP,OIL FILLER		1	1			
103	006	31A05-00031	CAMSHAFT		1	1			
103	007	MF476215	KEY,WOODRUFF		1	1			
103	008	30405-31403	PLATE,THRUST		1	1			
103	009	MF240051	BOLT,W/WASHER		2	2			
103	010	31A05-00300	TAPPET		8	8			
103	011	31A05-01300	ROD,PUSH		8	8			
103	012	MM400380	PIPE,BREATHER		1	1			

NOTE	S4L(FOR T303) ,S4L2(FOR 353)

FIG 104 T300/350NC	CRANKCASE	P1	Year / Month 2008 / 12	

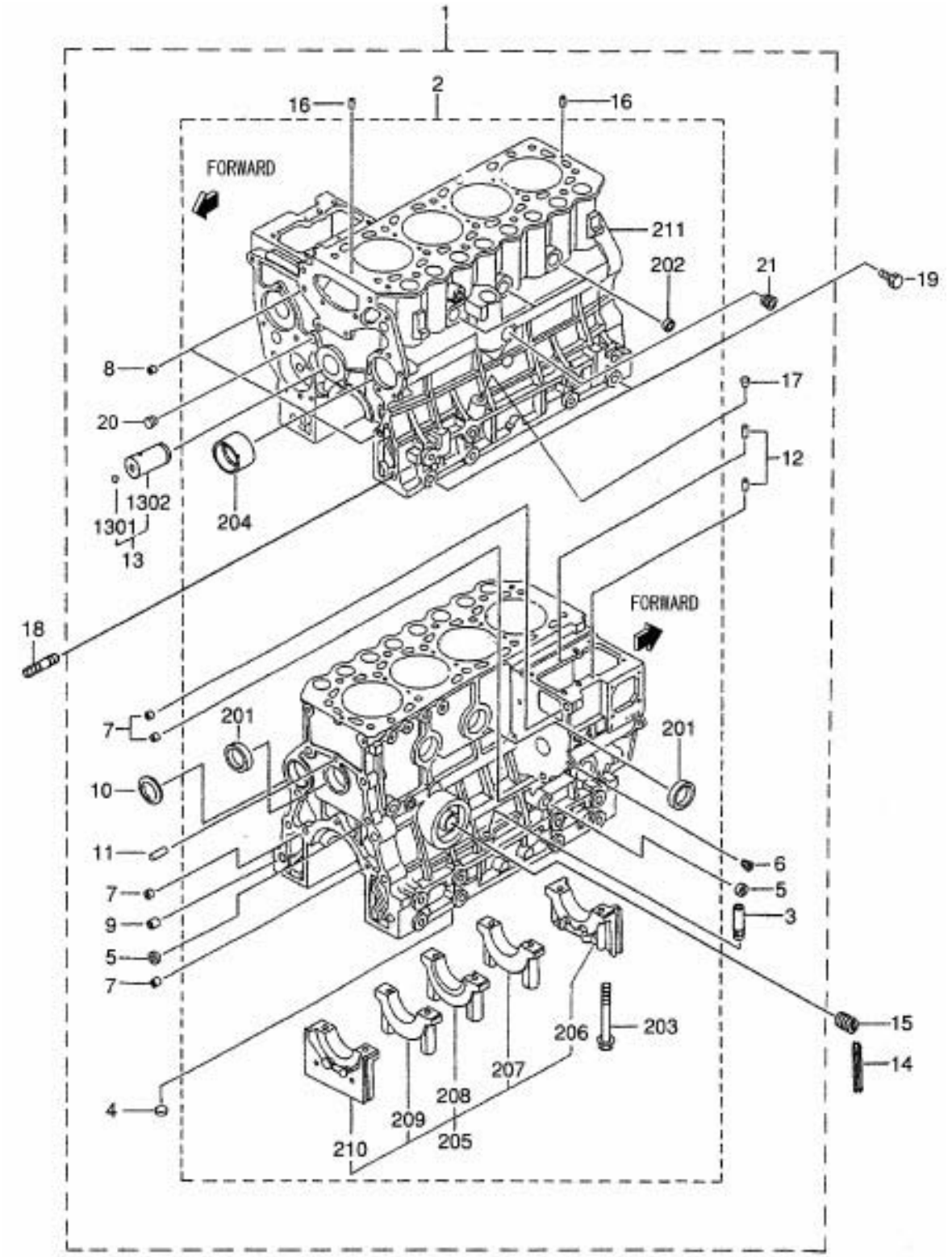

NOTE	S4L(FOR 331),S4L2(FOR 335)

FIG 104 T303NC / T353NC	CRANKCASE	P1	Year / Month 2008 / 12	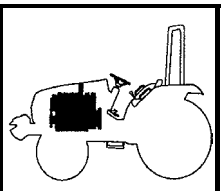

KEY NO.		PART NO.	DESCRIPSTION	SPEC.	QTY.		REPAIR	ENG.SERIAL NO.	REMARKS
					S4L	S4L2			
104	001	31A07-16010	BLOCK ASSY,CYLINDER		1	1	C		
104	002	*	BLOCK SUB ASSY,CYL		1	1			
104	00201	04826-22000	CAP,SEALING		3	3	B		
104	00202	04826-23500	CAP,SEALING		3	3	B		
104	00203	31A07-00801	BOLT,BEARING CAP		10	10			
104	00204	31A07-03100	BUSH,CAMSHAFT		1	1			
104	00205	*	CAP SET,METAL		1	1			
104	00206	*	CAP,METAL FRONT		1	1			
104	00207	*	CAP,METAL NO.2		1	1			
104	00208	*	CAP,METAL NO.3		1	1			
104	00209	*	CAP,METAL NO.4		1	1			
104	00210	*	CAP,METAL REAR		1	1			
104	00211	*	BLOCK,CYLINDER		1	1			
104	003	MM430613	GUIDE,OIL LEVEL		1	1			
104	004	MF665532	CAP,SEALING		1	1			
104	005	MF665533	CAP,SEALING		1	1			
104	006	MS661140	PLUG,TAPERED		1	2			
104	007	MS471104	BUSHING,KNOCK		4	4			
104	008	MS471105	BUSHING,KNOCK		2	2			
104	009	MS471110	BUSHING,KNOCK		1	1			
104	010	MF665511	PLUG,EXPANSION		1	1			
104	011	MF472404	PIN,DOWEL		1	1			
104	012	MM409645	PIN,DOWEL		2	2			
104	013	31A23-00051	SHAFT ASSY,IDLER		1	1			
104	01301	*	BALL,STEEL		1	1			
104	01302	*	SHAFT,IDLER		1	1			
104	014	31A07-12200	SEAL,SIDE		4	4			
104	015	30L07-00700	SHAFT,OIL FILTER		1	1			
104	016	F2846-05000	PIN,DOWEL		2	2			
104	017	MD024256	PLUG,TAPERED		1	1			
104	018	31A07-02500	STUD		2	2			
104	019	MF100110	BOLT		4	4			
104	020	04827-90130	PLUG,TAPERED MEC		2	2			
104	021	MS661142	PLUG,TAPER		1	1			

NOTE	S4L(FOR T303) ,S4L2(FOR 353)

FIG 105 T300/350NC	REAR PLATE & MAIN METAL	P1	Year / Month 2008 / 12	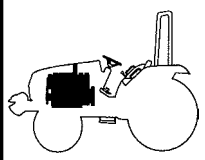

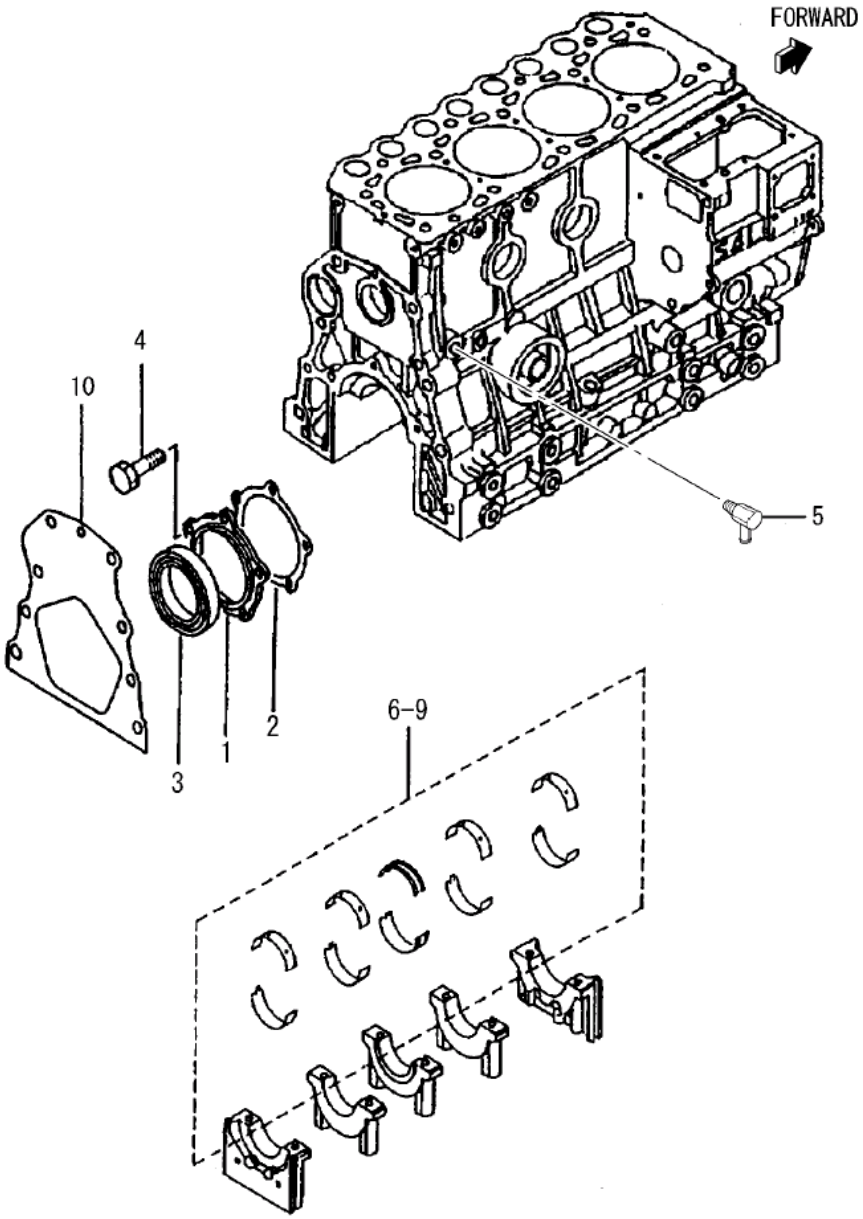

NOTE	S4L(FOR 331),S4L2(FOR 335)

FIG 105 T303NC / T353NC	REAR PLATE & MAIN METAL	P1	Year / Month 2008 / 12	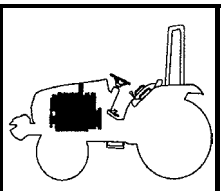

KEY NO.		PART NO.	DESCRIPSTION	SPEC.	QTY.		REPAIR	ENG.SERIAL NO.	REMARKS
					S4L	S4L2			
105	001	31A07-11601	CASE,OIL SEAL		1	1			
105	002	31A07-11701	GASKET,OIL SEAL CASE		1	1	B		
105	003	31A07-02300	SEAL,OIL		1	1			
105	004	MF100055	BOLT		5	5			
105	005	31A46-12400	JOINT,WATER DRAIN		1	1			
105	006	31A09-01050	BEARING SET	STD	1	1	B		
105	007	31A09-01060	BEARING SET	U.S 0.25	1	1	B		
105	008	31A09-01070	BEARING SET	U.S 0.50	1	1	B		
105	009	31A09-01080	BEARING SET	U.S 0.75	1	1	B		
105	010	31A07-02401	GASKET,REAR		1	1	B		

NOTE	S4L(FOR T303) ,S4L2(FOR 353)

FIG 106 T300/350NC	TIMING GEAR CASE	P1	Year / Month 2008 / 12	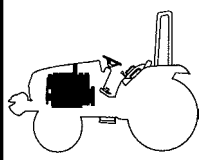

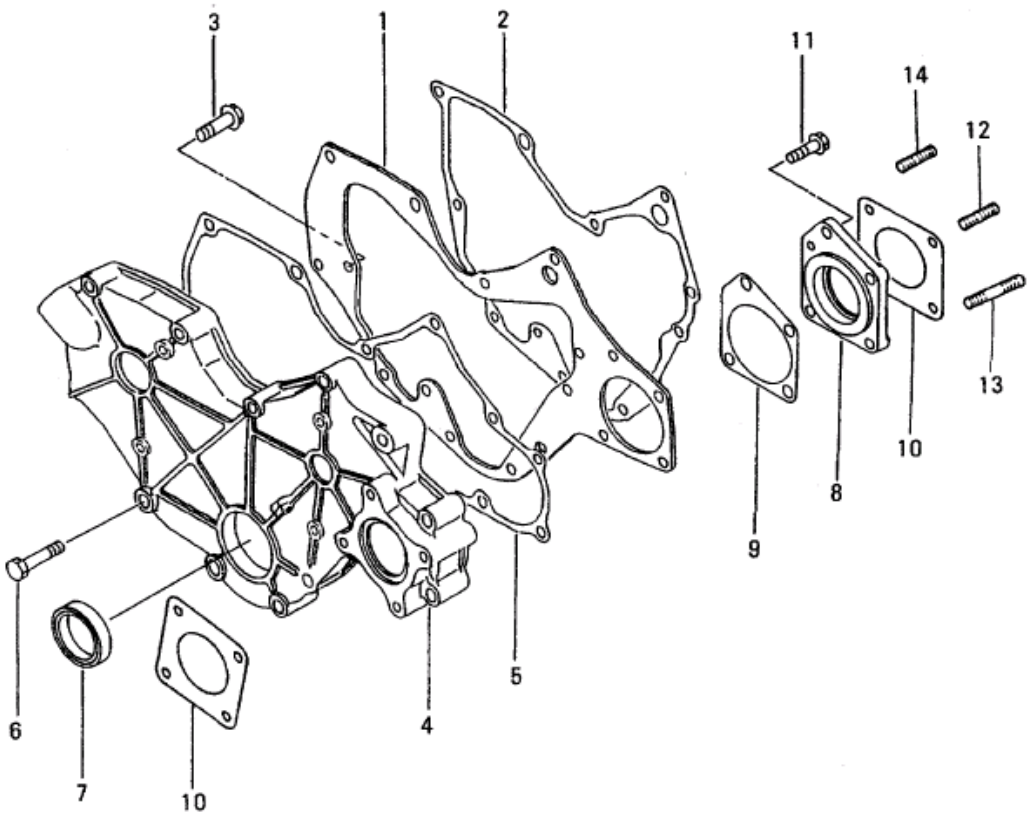

NOTE	S4L(FOR 331),S4L2(FOR 335)

FIG 106 T303NC / T353NC	TIMING GEAR CASE	P1	Year / Month 2008 / 12	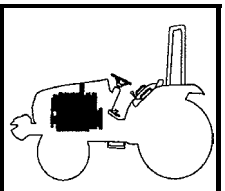

KEY NO.		PART NO.	DESCRIPSTION	SPEC.	QTY.		REPAIR	ENG.SERIAL NO.	REMARKS
					S4L	S4L2			
106	001	31A11-02100	PLATE,FRONT		1	1			
106	002	31A07-11901	GASKET,FRONT PLATE		1	1	B		
106	003	MF240051	BOLT,W/WASHER		5	5			
106	004	31A11-00802	CASE,GEAR P.T.O.		1	1			
106	005	31A11-11101	GASKET,GEAR		1	1	B		
106	006	MF100064	BOLT		8	8			
106	007	MD008762	SEAL,OIL		1	1	B		
106	008	31A11-05101	HOUSING,GEAR		1	1			
106	009	31A11-05201	GASKET,HOUSING		1	1	B		
106	010	30A11-00101	GASKET,O/PUMP COVER		2	2	B		
106	011	MF241257	BOLT,W/WASHER		1	1			
106	012	MS401427	STUD		1	1			
106	013	MS401435	STUD		1	1			
106	014	MS401426	STUD		2	2			

NOTE	S4L(FOR T303) ,S4L2(FOR 353)

FIG 107 T300/350NC	OIL PAN	P1	Year / Month 2008 / 12	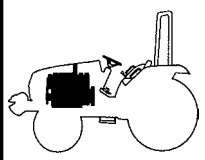

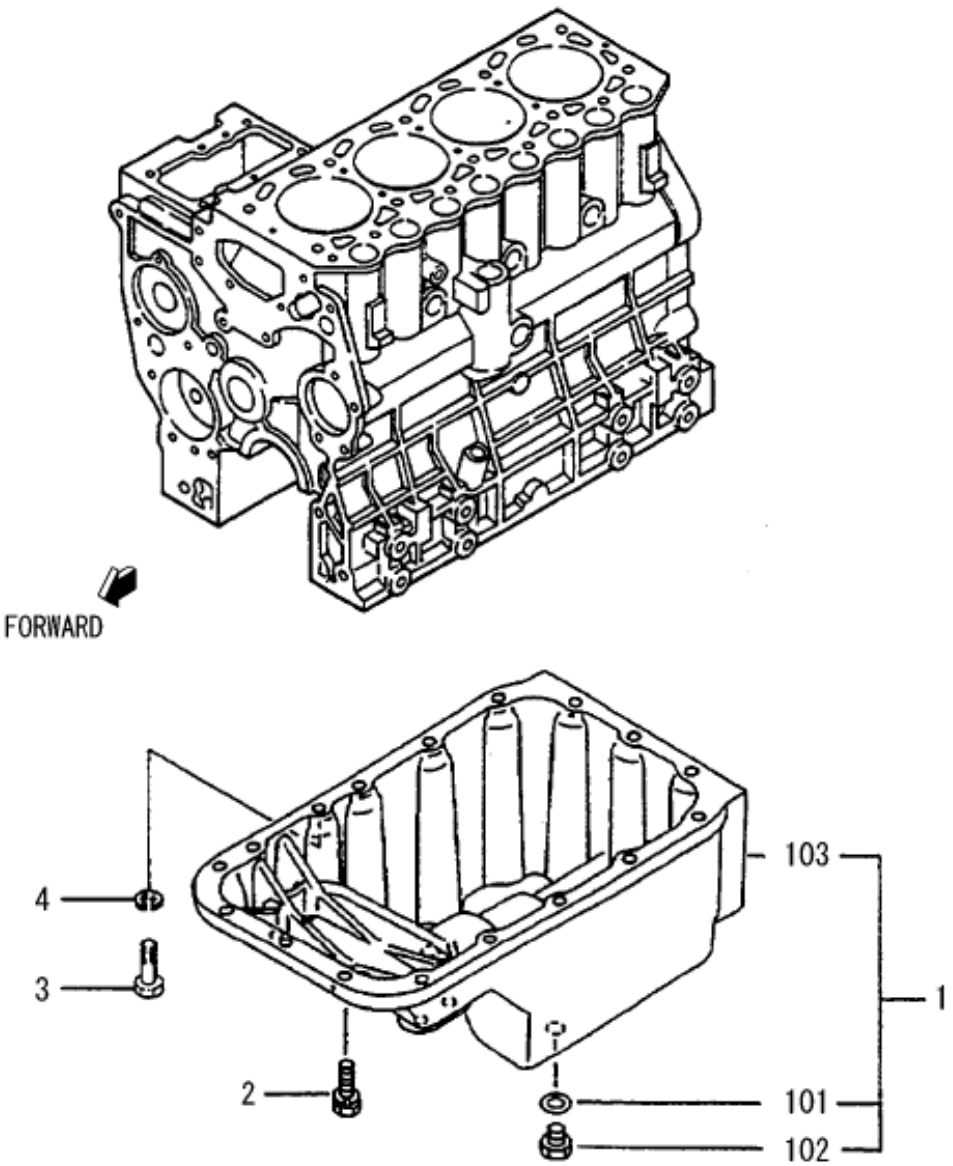

NOTE	S4L(FOR 331),S4L2(FOR 335)

FIG 107 T303NC / T353NC	OIL PAN	P1	Year / Month 2008 / 12	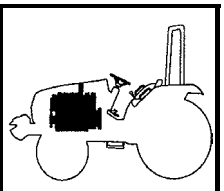

KEY NO.		PART NO.	DESCRIPSTION	SPEC.	QTY.		REPAIR	ENG.SERIAL NO.	REMARKS
					S4L	S4L2			
107	001	31A13-03010	PAN ASSY,OIL		1	1			
107	00101	MF660065	GASKET,OIL DRAIN		2	2			
107	00102	MF665004	PLUG,DRAIN		2	2	B		
107	00103	*	PAN,OIL		1	1			
107	002	30H13-00801	BOLT,FLANGE		16	16			
107	003	F1035-08040	BOLT		1	1			
107	004	F2515-08000	WASHER,SPRING		1	1			

NOTE	S4L(FOR T303) ,S4L2(FOR 353)

FIG 108 T300/350NC	MAIN MOVING PARTS	P1	Year / Month 2008 / 12	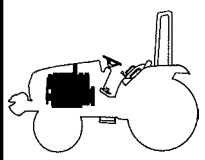

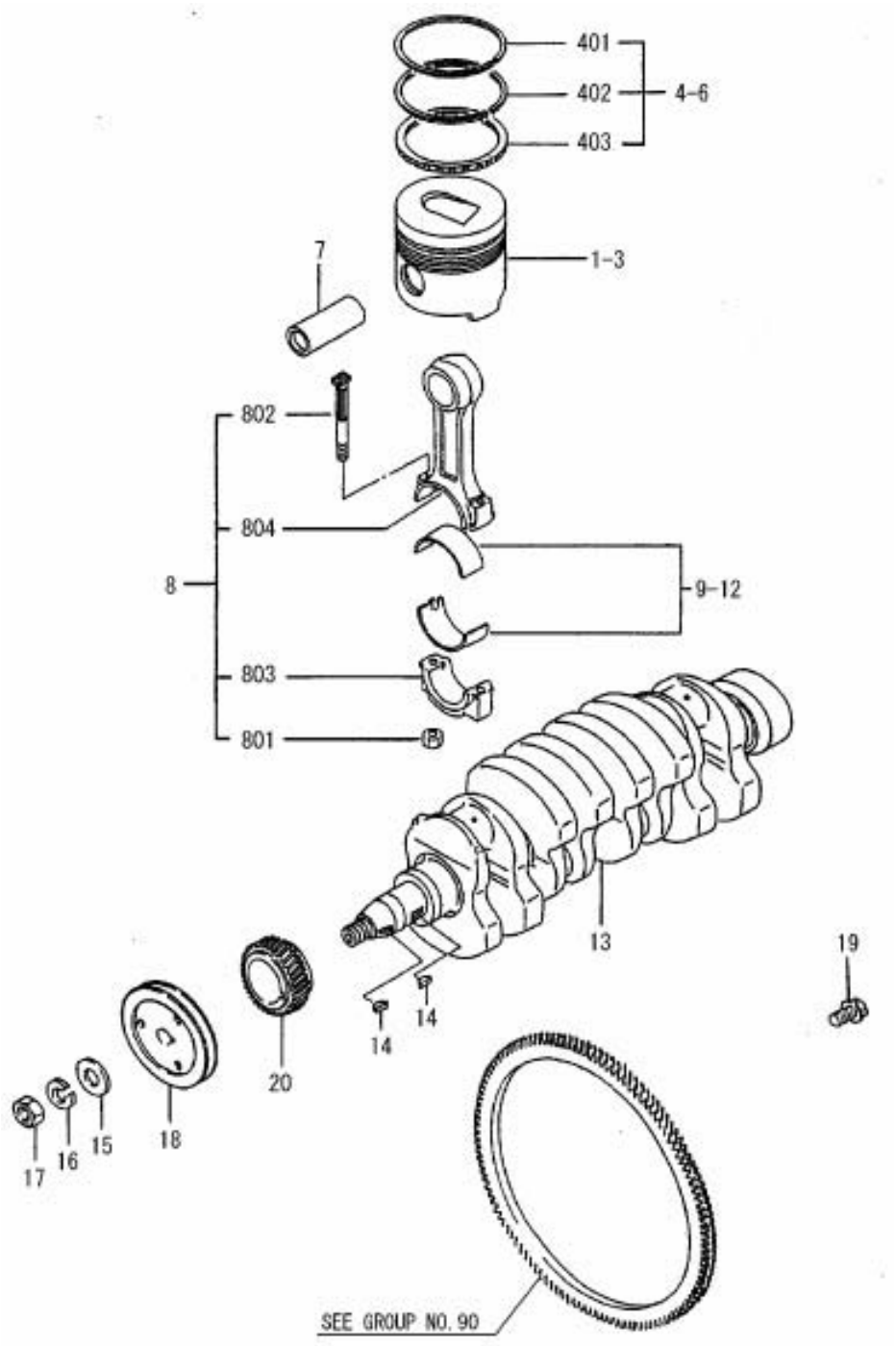

NOTE	S4L(FOR 331),S4L2(FOR 335)

FIG 108 T303NC / T353NC	MAIN MOVING PARTS	P1	Year / Month 2008 / 12	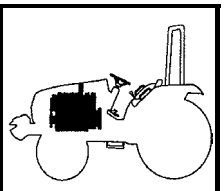

KEY NO.	PART NO.	DESCRIPSTION	SPEC.	QTY.		REPAIR	ENG.SERIAL NO.	REMARKS
				S4L	S4L2			
108 001	31A17-09100	PISTON	STD	4	4	B		
108 002	31A17-09200	PISTON	O.S 0.25	4	4	B		
108 003	31A17-09300	PISTON	O.S 0.50	4	4	B		
108 004	31A17-00010	RING SET,PISTON	STD	4	4	B		
108 00401	*	RING,PISTON NO.1		4	4			
108 00402	*	RING,PISTON NO.2		4	4			
108 00403	*	RING ASSY,OIL		4	4			
108 005	31A17-00020	RING SET,PISTON	O.S 0.25	4	4	B		
108 006	31A17-00030	RING SET,PISTON	O.S 0.50	4	4	B		
108 007	31A17-10602	PIN,PISTON		4	4			
108 008	31A19-10024	ROD ASSY,CONNECTING		4	-	B		
108 008	31A19-01023	ROD ASSY,CONNECTING		-	4	B		
108 00801	MD006704	NUT,CONNECTING ROD		8	8			
108 00802	MD021105	BOLT,CONNECTING ROD		8	8			
108 00803	*	CAP,CONNECTING ROD		4	4			
108 00804	*	CONNECTING ROD		4	4			
108 009	30A19-00040	BEARING,CON-ROD	STD	4	4	B		
108 010	30A19-10010	BEARING,CON-ROD	U.S 0.25	4	4	B		
108 011	30A19-10020	BEARING,CON-ROD	U.S 0.50	4	4	B		
108 012	30A19-10030	BEARING,CON-ROD	U.S 0.75	4	4	B		
108 013	31A20-00103	CRANKSHAFT		1	-	C		
108 013	31A20-00201	CRANKSHAFT		-	1	C		
108 014	MF476215	KEY,WOODRUFF		2	2			
108 015	MF450010	WASHER,PLAIN		1	1			
108 016	MF450410	WASHER,SPRING		1	1			
108 017	MF430126	NUT		1	1			
108 018	31A20-22102	PULLEY,CRANKSHAFT		1	1			
108 019	31A21-03800	BOLT,DRIVE PLATE		4	4			
108 020	31A23-01302	GEAR,CRANKSHAFT	Z=28	1	1			

NOTE S4L(FOR T303) ,S4L2(FOR 353)

FIG 109 T300/350NC	TIMING GEAR	P1	Year / Month 2008 / 12	

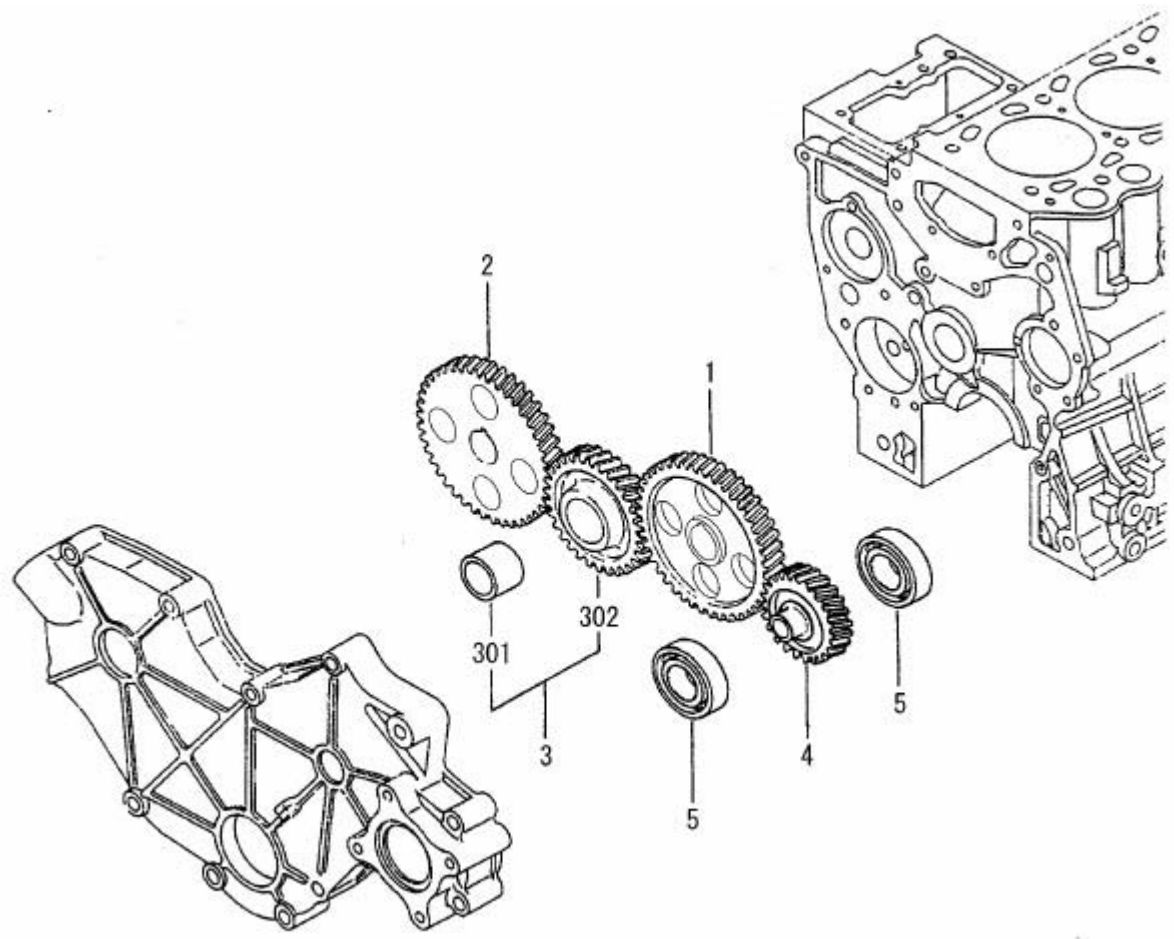

NOTE	S4L(FOR 331),S4L2(FOR 335)

FIG 109 T303NC / T353NC	TIMING GEAR	P1	Year / Month 2008 / 12	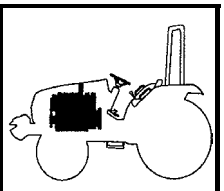

KEY NO.		PART NO.	DESCRIPSTION	SPEC.	QTY.		REPAIR	ENG.SERIAL NO.	REMARKS
					S4L	S4L2			
109	001	31A23-03400	GEAR,CAMSHAFT	Z=56	1	1			
109	002	31A23-03600	GEAR,INJECTION PUMP	Z=56	1	1			
109	003	31A23-03020	GEAR ASSY,IDLER	Z=39	1	1			
109	00301	*	BUSHING,IDLER GEAR		1	1			
109	00301	*	GEAR,IDLER		1	1			
109	004	31A23-03500	GEAR,PRESS OIL PUMP	Z=28	1	1			
109	005	MD712517	BEARING,REAR		2	2	B		

NOTE	S4L(FOR T303) ,S4L2(FOR 353)

FIG 110 T300/350NC	INLET & EXHAUST SYSTEM	P1	Year / Month 2008 / 12	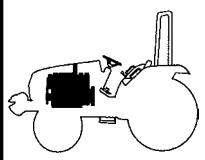

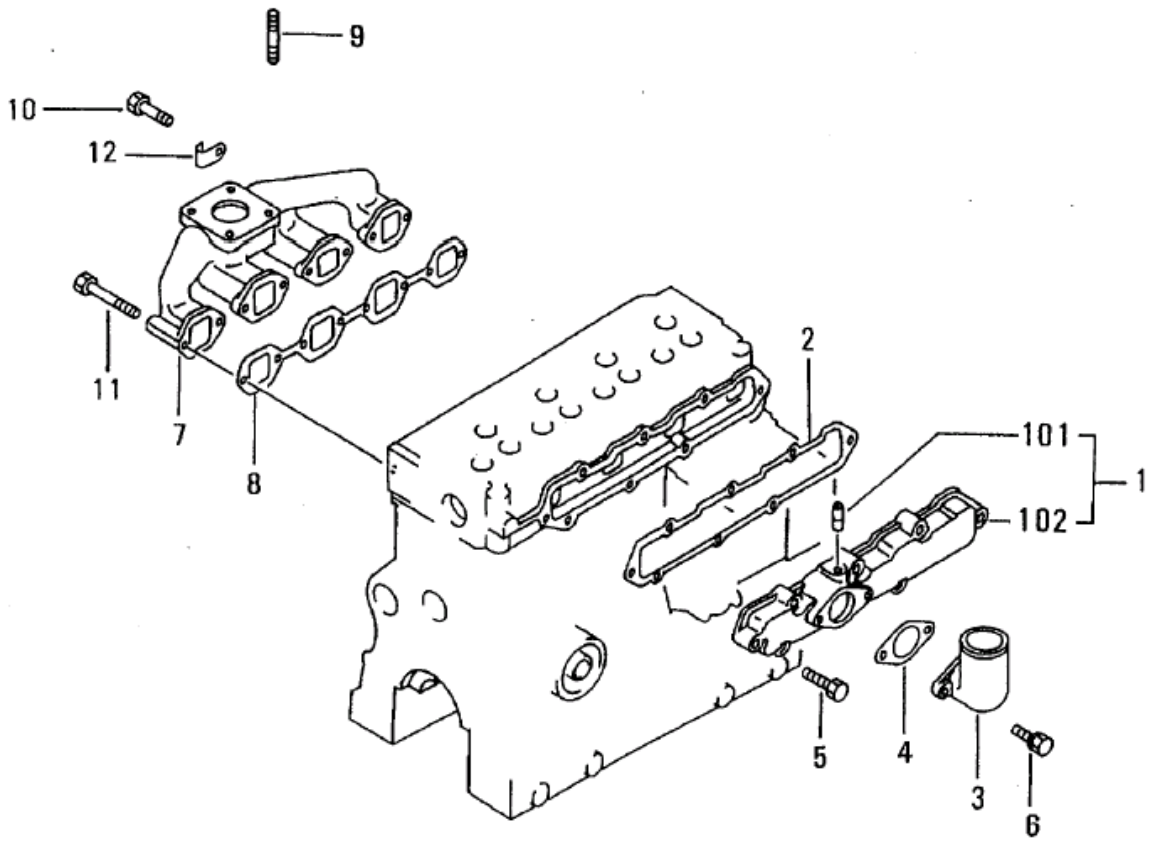

NOTE	S4L(FOR 331),S4L2(FOR 335)

FIG 110 T303NC / T353NC	INLET & EXHAUST SYSTEM	P1	Year / Month 2008 / 12	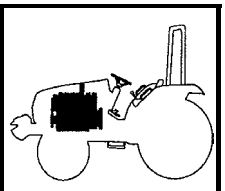

KEY NO.		PART NO.	DESCRIPSTION	SPEC.	QTY.		REPAIR	ENG.SERIAL NO.	REMARKS
					S4L	S4L2			
110	001	31A30-05030	COVER ASSY,INLET		1	1			
110	00101	*	PIPE		1	1			
110	00102	*	COVER,INLET		1	1			
110	002	31A30-05600	GASKET,INLET COVER		1	1			
110	003	31A30-03600	PIPE,INLET		1	1			
110	004	31A30-03700	GASKET,INLET PIPE		1	1			
110	005	MF241259	BOLT,W/WASHER		8	8	A		
110	006	MF241253	BOLT,W/WASHER		2	2	A		
110	007	31A32-00402	MANIFOLD ASSY,EXH		1	1			
110	008	31A32-01200	GASKET,EXHAUST		1	1			
110	009	MF401936	STUD		4	4			
110	010	F1035-08020	BOLT		6	6	A		
110	011	MF101266	BOLT		2	2	A		
110	012	31A32-02100	CLAMP		1	1	A		

NOTE	S4L(FOR T303) ,S4L2(FOR 353)

FIG 111 T300/350NC	OIL PUMP	P1	Year / Month 2008 / 12	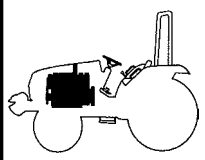

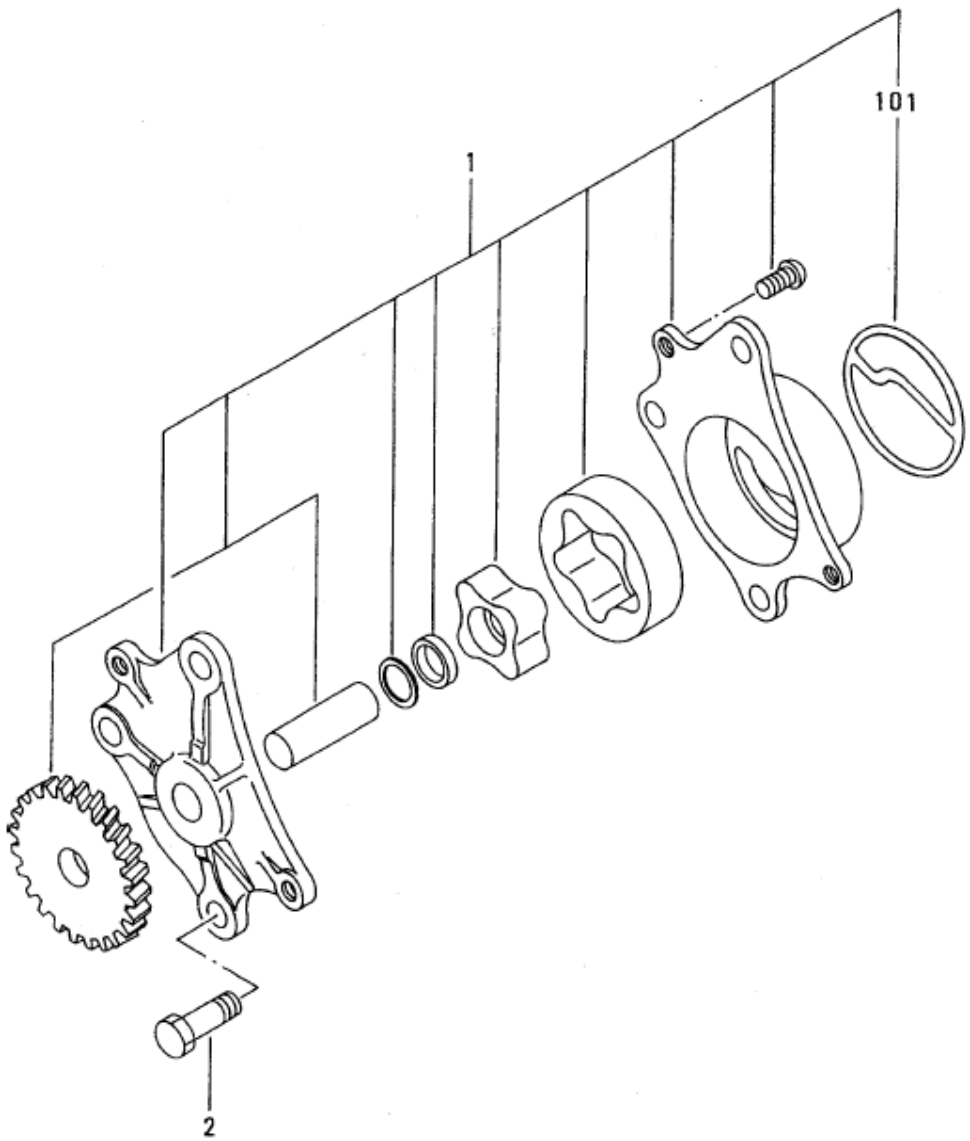

NOTE	S4L(FOR 331),S4L2(FOR 335)

FIG 111 T303NC / T353NC	OIL PUMP	P1	Year / Month 2008 / 12	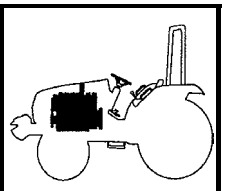

KEY NO.		PART NO.	DESCRIPSTION	SPEC.	QTY.		REPAIR	ENG.SERIAL NO.	REMARKS
					S4L	S4L2			
111	001	31A35-30010	PUMP ASSY,OIL		1	1			
111	00101	31A35-02300	PACKING,BODY		1	1			
111	002	MF101256	BOLT		3	3	A		

NOTE	S4L(FOR T303) ,S4L2(FOR 353)

FIG 112 T300/350NC	OIL SYSTEM	P1	Year / Month 2008 / 12	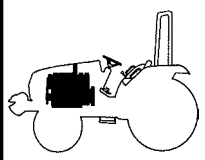

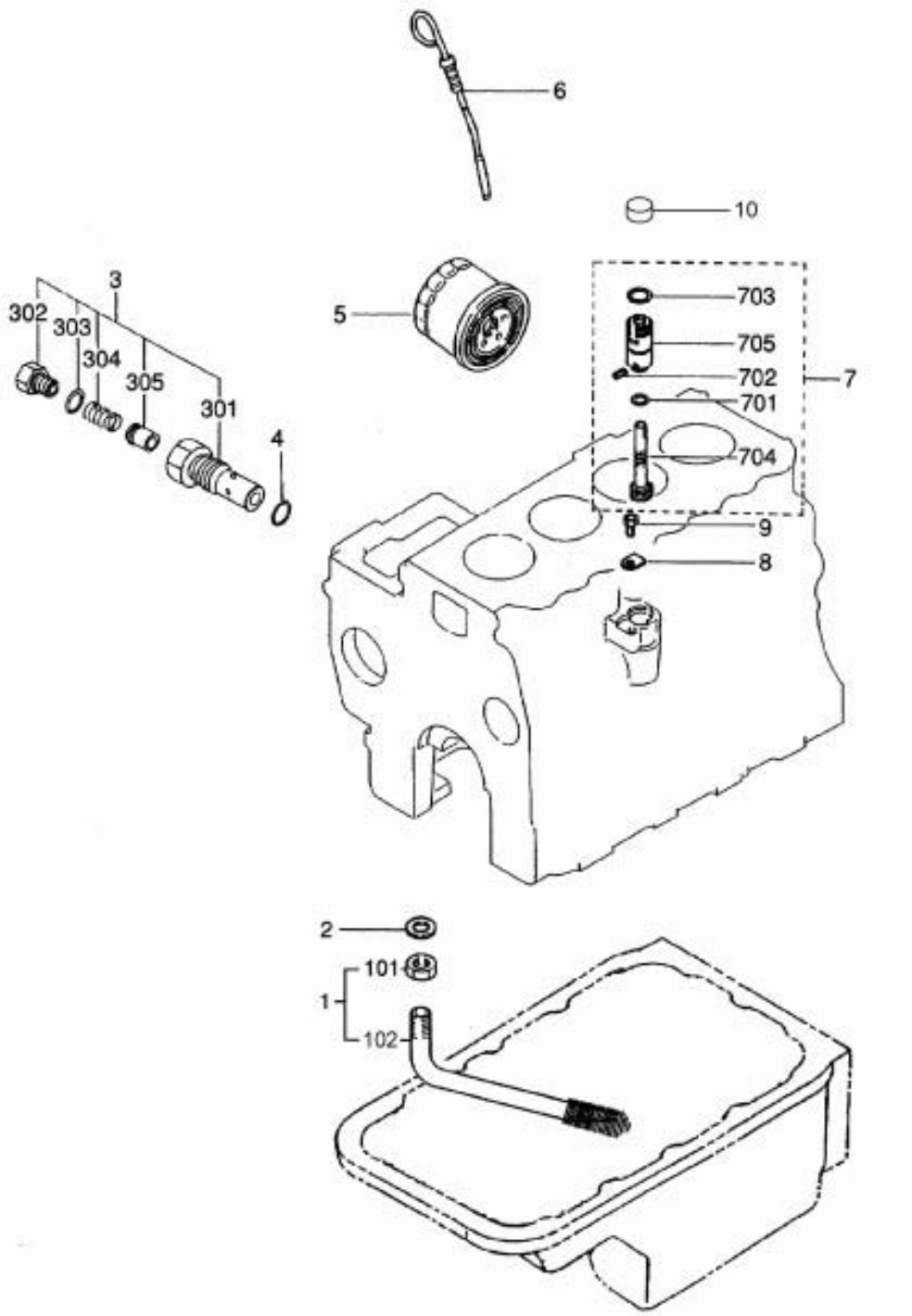

NOTE	S4L(FOR 331),S4L2(FOR 335)

FIG 112 T303NC / T353NC	OIL SYSTEM	P1	Year / Month 2008 / 12	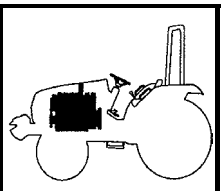

KEY NO.		PART NO.	DESCRIPSTION	SPEC.	QTY.		REPAIR	ENG.SERIAL NO.	REMARKS
					S4L	S4L2			
112	001	31A35-05050	STRAINER ASSY		1	1	B		
112	00101	MF430729	NUT,JAM		1	1			
112	00102	*	STRAINER,OIL		1	1			
112	00103	MF660036	GASKET		1	1			
112	003	32A36-05012	VALVE ASSY,RELIEF		1	1			
112	00301	*	HOUSING,VALVE		1	1			
112	00302	*	PLUG		1	1			
112	00303	*	GASKET		1	1			
112	00304	*	SPRING,RELIEF		1	1			
112	00305	*	PLUNGER,RELIEF		1	1			
112	004	34340-00700	GASKET		1	1	B		
112	005	31A40-02100	ELEMENT,OIL FILTER		1	1			
112	006	31A42-10100	GAGE,OIL LEVEL		1	1			
112	007	MM430-59801	DRIVEN UNIT,METER		1	1			
112	00701	MD701788	O-RING		1	1	B		
112	00702	MF472535	PIN,SPRING		1	1	B		
112	00703	MF520012	O-RING		1	1	B		
112	00704	MM407171	GEAR	Z=16	1	1			
112	00705	MM430-41901	SLEEVE		1	1			
112	008	MD701789	PLATE		1	1			
112	009	MF241223	BOLT,W/WASHER		1	1			
112	010	*	PLUG SHIPPING		1	1			

NOTE	S4L(FOR T303) ,S4L2(FOR 353)

FIG 113 T300/350NC	COOLING SYSTEM	P1	Year / Month 2008 / 12	

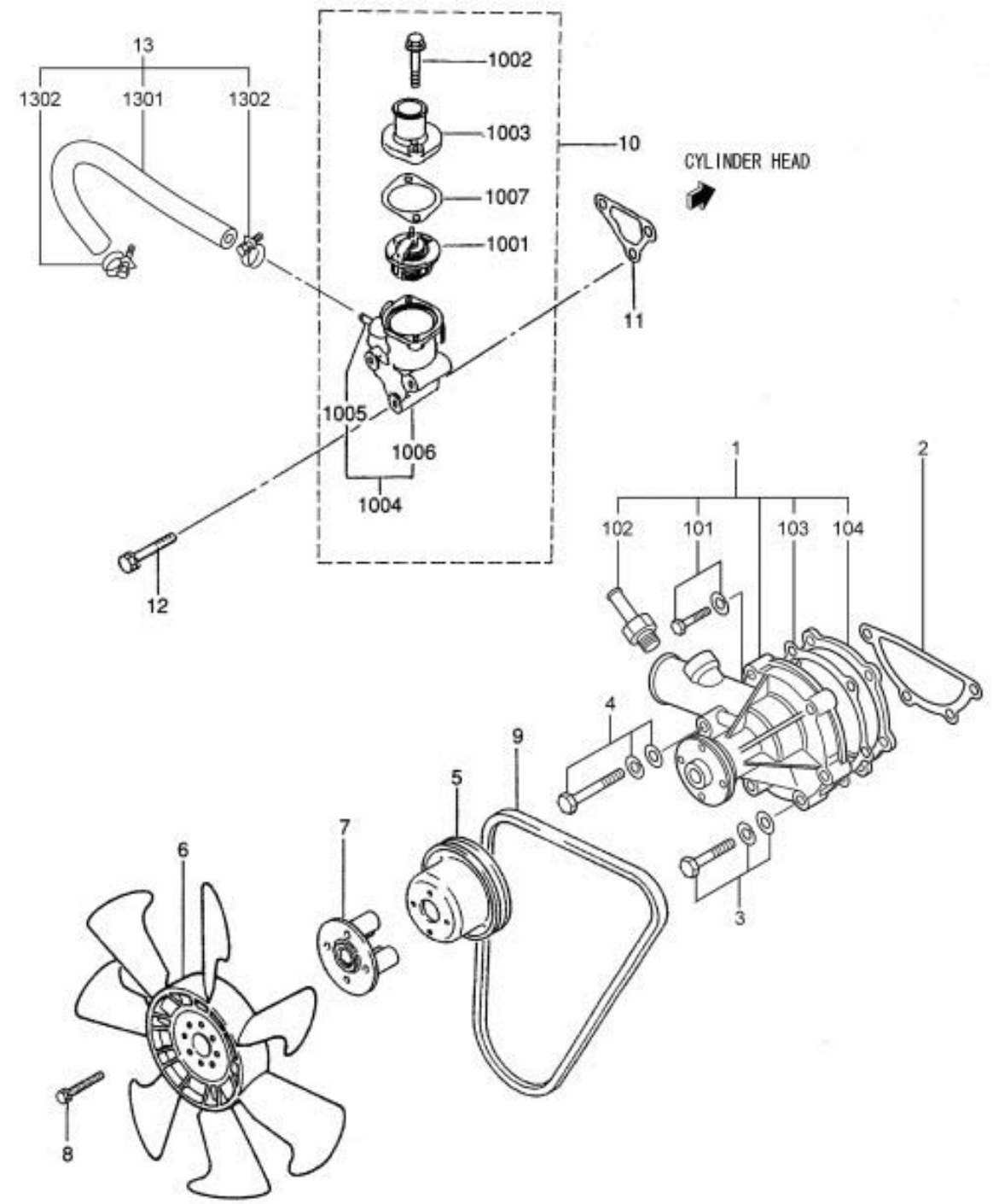

NOTE	S4L(FOR 331),S4L2(FOR 335)

FIG 113 T303NC / T353NC	COOLING SYSTEM	P1	Year / Month 2008 / 12	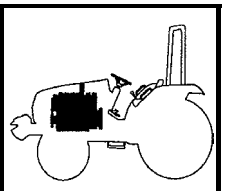

KEY NO.	PART NO.	DESCRIPSTION	SPEC.	QTY.		REPAIR	ENG.SERIAL NO.	REMARKS
				S4L	S4L2			
113 001	MM409303	PUMP ASSY,WATER		1	1	B		
113 00101	MF240031	BOLT,W/WASHER		2	2			
113 00102	MM409304	JOINT,WATER PUMP		1	1			
113 00103	MM409326	GASKET,WATER PUMP		1	1	B		
113 00104	MM409327	PLATE,WATER PUMP		1	1			
113 002	30H45-00101	GASKET,WATER PUMP		1	1	B		
113 003	MF244860	BOLT,W/WASHER		3	3			
113 004	MF244863	BOLT,W/WASHER		1	1			
113 005	31A45-20700	PULLEY,W/PUMP		1	1			
113 006	31A48-00200	FAN,COOLING		1	1			
113 007	MM434493	SPACER,FAN		1	1			
113 008	MF241229	BOLT,W/WASHER		4	4			
113 009	MD041704	V-BELT		1	1	A		
113 010	31A46-03011	THERMOSTAT ASSY		1	1			
113 01001	K6516441	THERMOSTAT		1	1			
113 01002	MF140227	BOLT,FLANGE		2	2			
113 01003	MM409-31302	COVER,THERMOSTAT		1	1			
113 01004	31A46-00020	CASE ASSY,THERMOSTAT		1	1			
113 01005	*	PIPE,THERMOSTAT		1	1			
113 01006	*	CASE,THERMOSTAT		1	1			
113 01007	31A46-11200	GASKET,THERMOSTAT		1	1	B		
113 011	31A46-10101	GASKET,THERMO CASE		1	1	B		
113 012	MF241266	BOLT,W/WASHER		3	3			
113 013	31A46-05010	HOSE ASSY		1	1			
113 01301	31A46-02600	HOSE		1	1			
113 01302	F4300-02000	CLAMP,HOSE		2	2			

NOTE S4L(FOR T303) ,S4L2(FOR 353)

FIG 114 T300/350NC	FUEL SYSTEM	P1	Year / Month 2008 / 12	

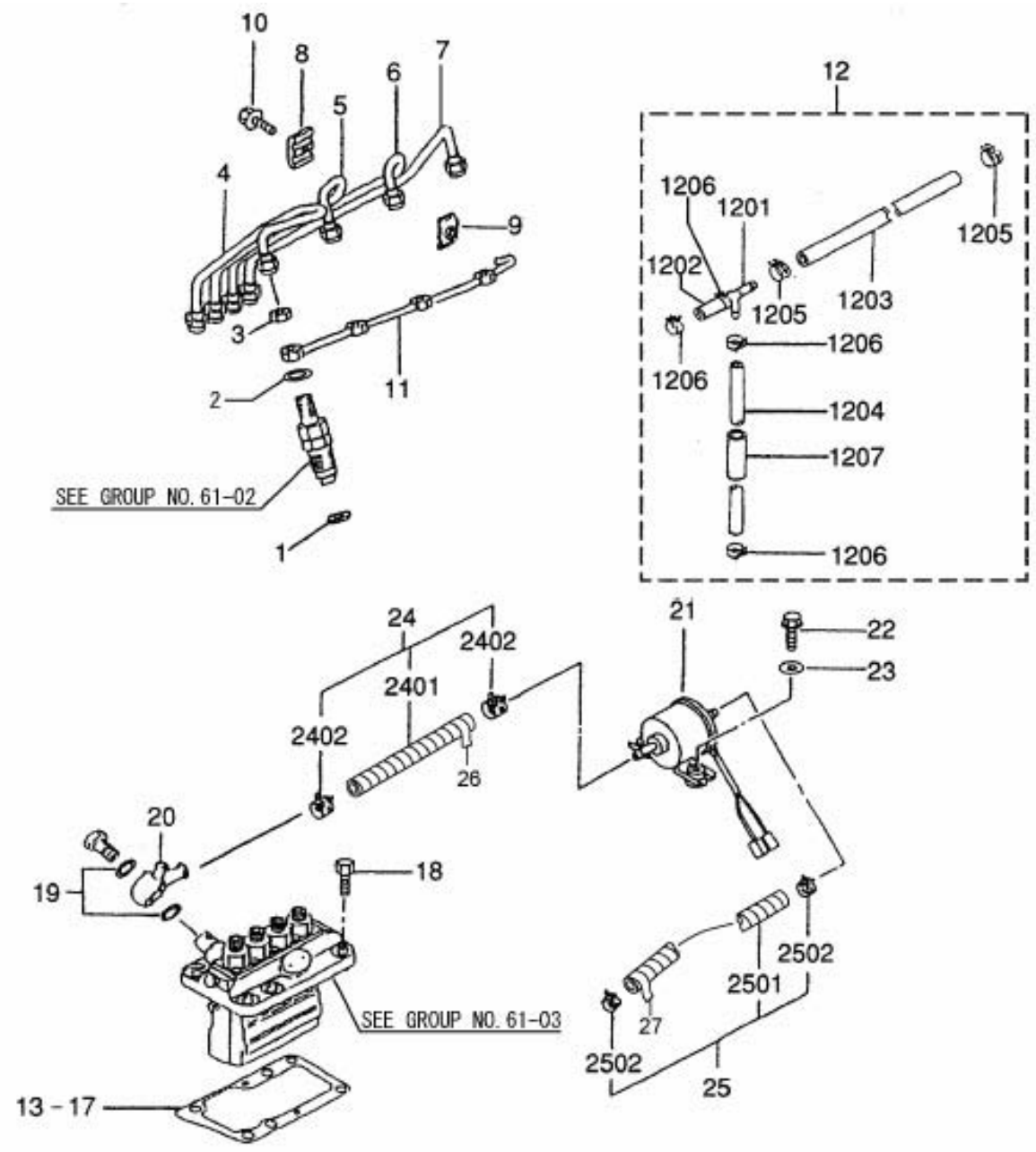

NOTE	S4L(FOR 331),S4L2(FOR 335)

FIG 114 T303NC / T353NC	FUEL SYSTEM	P1	Year / Month 2008 / 12	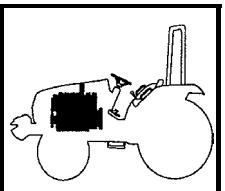

KEY NO.	PART NO.	DESCRIPSTION	SPEC.	QTY.		REPAIR	ENG.SERIAL NO.	REMARKS
				S4L	S4L2			
114 001	MD070717	GASKET,HOLDER		4	4	B		
114 002	MD068355	GASKET,FUEL RETURN		4	4	B		
114 003	MD068353	NUT		4	4			
114 004	31A61-07101	PIPE,INJECTION NO.1		1	1			
114 005	31A61-07201	PIPE,INJECTION NO.2		1	1			
114 006	31A61-07301	PIPE,INJECTION NO.3		1	1			
114 007	31A61-07401	PIPE,INJECTION NO.4		1	1			
114 008	MM430703	CLAMP		3	3			
114 009	MM430614	CLAMP		3	3			
114 010	MF243628	BOLT,W/WASHER		3	3			
114 011	31A61-12600	PIPE,FUEL LEAK OFF		1	1			
114 012	31A61-03200	HOSE ASSY,AIR VENT		1	1			
114 01201	MM400886	JOINT		1	1			
114 01202	MM430130	HOSE,FUEL		1	1			
114 01203	MS602063	HOSE,FUEL		1	1			
114 01204	MS604043	HOSE,FUEL		1	1			
114 01205	MS660163	CLIP		2	2			
114 01206	MS660169	CLIP		4	4			
114 01207	31A61-01200	HOSE,RUBBER		1	1	B		
114 013	MM409036	SHIM	T=0.7	AR	AR			
114 014	MM409037	SHIM	T=0.8	AR	AR			
114 015	MM409038	SHIM	T=0.9	AR	AR			
114 016	MM409039	SHIM	T=1.0	AR	AR			
114 017	MM409031	SHIM	T=0.2	AR	AR			
114 018	MF100055	BOLT		6	6			
114 019	MK661-14000	WASHER,SEAL		2	2			
114 020	31A65-00600	COLLAR,UNION		1	1			
114 021	31A60-00300	PUMP ASSY,FUEL		1	1	B		
114 022	MF241229	BOLT,W/WASHER		2	2			
114 023	MD107589	WASHER		2	2			
114 024	31B61-05200	HOSE ASSY,FUEL		1	1			
114 02401	MS603029	HOSE,FUEL		1	1			
114 02402	MS660164	CLIP		2	2			
114 025	MM409276	HOSE ASSY,FUEL		1	1	A		
114 0250	MS603016	HOSE,FUEL		1	1			
114 0250	MS660164	CLIP		2	2			
114 026	05379-22020	TUBE,SPIRAL		1	1			
114 027	05379-22030	TUBE,SPIRAL		1	1			

NOTE	S4L(FOR T303) ,S4L2(FOR 353)

FIG 115 T300/350NC	NOZZLE	P1	Year / Month 2008 / 12	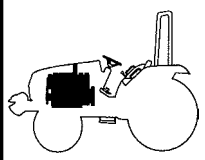

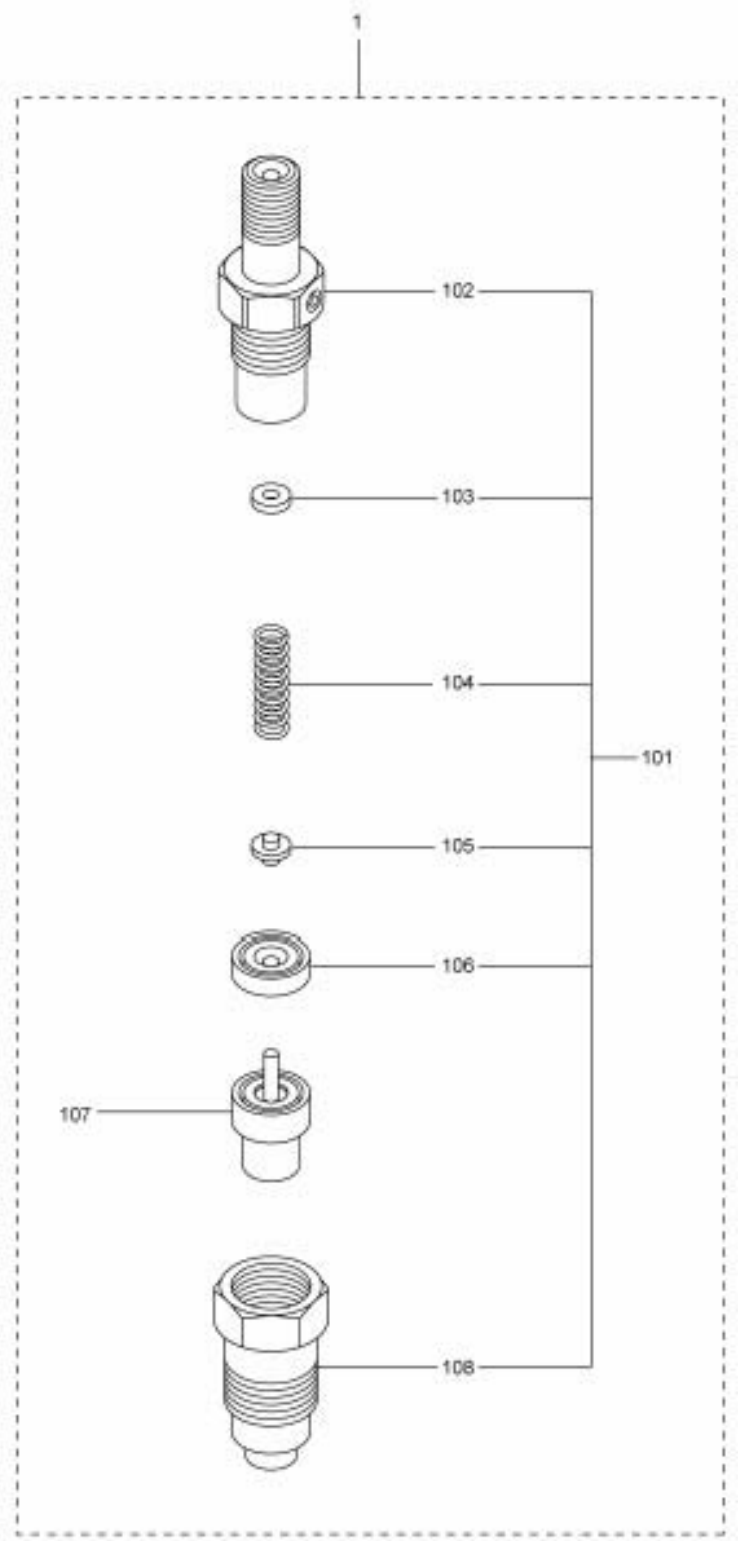

NOTE	S4L(FOR 331),S4L2(FOR 335)

FIG 115 T303NC / T353NC	NOZZLE	P1	Year / Month 2008 / 12	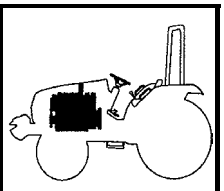

KEY NO.		PART NO.	DESCRIPSTION	SPEC.	QTY.		REPAIR	ENG.SERIAL NO.	REMARKS
					S4L	S4L2			
115	001	MM435-94101	NOZZLE & HOLDER ASSY	093500-3840 DEN	4	4			
115	00101	MM514045	HOLDER ASSY		4	4			
115	00102	MM514048	BODY SUB ASSY		4	4			
115	00103	MD603490	WASHER	T=1.25	AR	AR			
115	00103	MD603491	WASHER	T=1.30	AR	AR			
115	00103	MD603492	WASHER	T=1.35	AR	AR			
115	00103	MD603493	WASHER	T=1.40	AR	AR			
115	00103	MD603494	WASHER	T=1.45	AR	AR			
115	00103	MD603495	WASHER	T=1.50	AR	AR			
115	00103	MD603496	WASHER	T=1.55	AR	AR			
115	00103	MD603497	WASHER	T=1.60	AR	AR			
115	00103	MD603498	WASHER	T=1.65	AR	AR			
115	00103	MD603499	WASHER	T=1.70	AR	AR			
115	00104	MM514047	SPRING,PRESSURE		4	4	B		
115	00105	MM501838	PIN,PRESSURE		4	4			
115	00106	MM501841	PIECE,DISTANCE		4	4			
115	00107	MD603660	NOZZLE ASSY		4	4			
115	00108	MM501916	NUT,NOZZLE RETAINING		4	4			

NOTE	S4L(FOR T303) ,S4L2(FOR 353)

FIG 116 T300/350NC	FUEL INJECTION PUMP	P1	Year / Month 2008 / 12	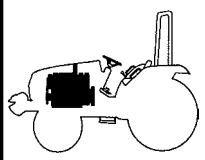

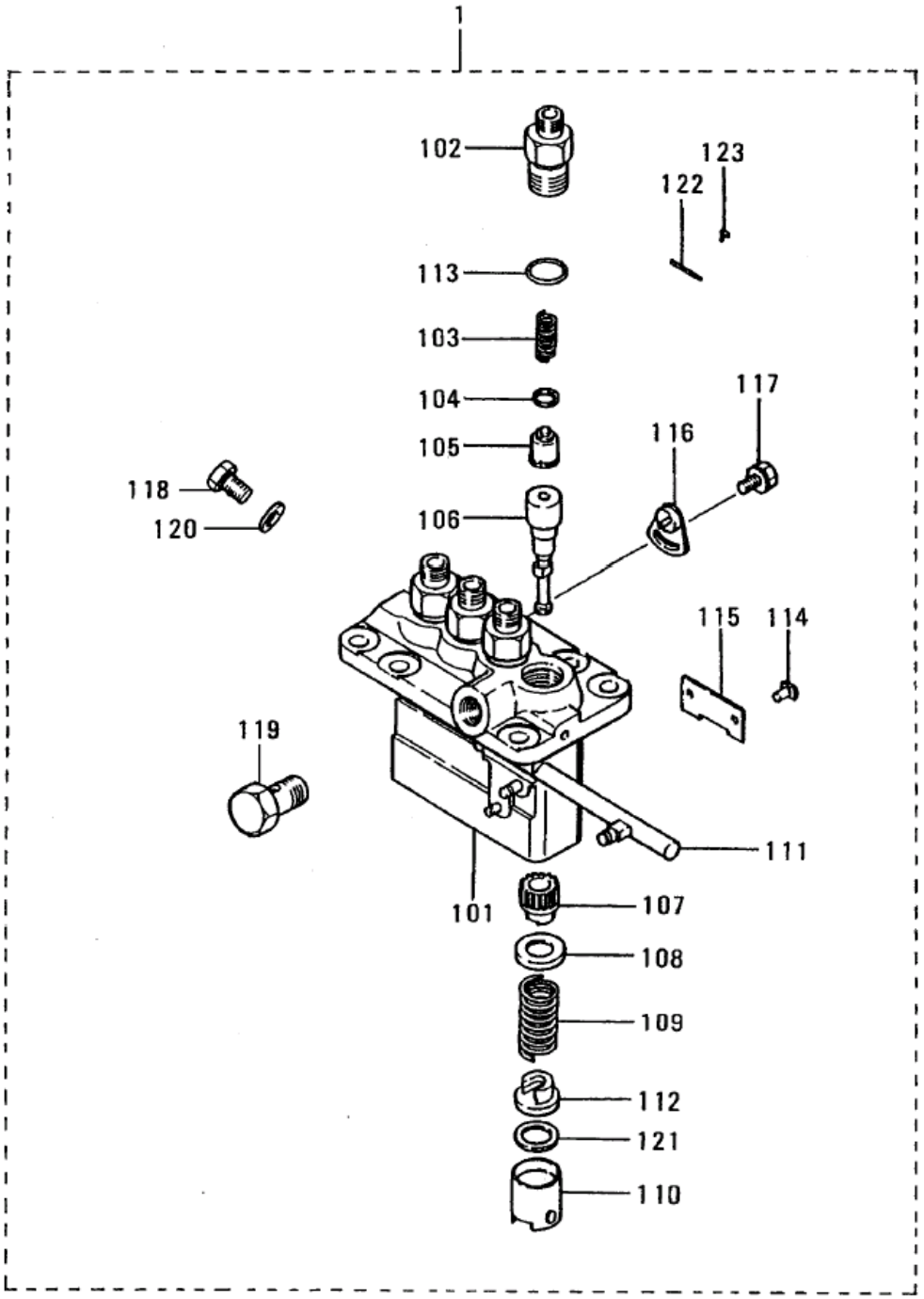

NOTE	S4L(FOR 331),S4L2(FOR 335)

FIG 116 T303NC / T353NC	FUEL INJECTION PUMP	P1	Year / Month 2008 / 12	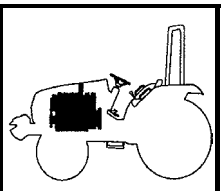

KEY NO.	PART NO.	DESCRIPSTION	SPEC.	QTY.		REPAIR	ENG.SERIAL NO.	REMARKS
				S4L	S4L2			
116 001	31A65-14030	PUMP ASSY,FUEL INJ	094500-6444 NDC	1	1			
116 00101	09011-05070	HOUSING SUB ASSY		1	1			
116 00102	47X01-13200	HOLDER,DELIVERY		4	4			
116 00103	47X01-13300	SPRING,DELIVERY		4	4			
116 00104	09013-70130	GASKET,DELIVERY		4	4			
116 00105	47X01-07700	VALVE SUB ASSY		4	4			
116 00106	47X01-19900	ELEMENT SUB ASSY		4	4			
116 00107	09016-10210	SLEEVE,CONTROL		4	4			
116 00108	09016-30082	SEAT,SPRING UPPER		4	4			
116 00109	09016-40172	SPRING,PLUNGER		4	4	B		
116 00110	09017-00170	TAPPET SUB ASSY		4	4			
116 00111	09021-00440	RACK ASSY,CONTROL		1	1			
116 00112	09030-10060	SEAT,SPRING LOWER		4	4			
116 00113	90802-20150	O-RING		4	4	B		
116 00114	09018-30050	PIN,TAPPET GUIDE		4	4			
116 00115	MM500232	PLATE		2	2			
116 00116	09006-80020	PLATE,ADJUSTING		3	3			
116 00117	94904-80800	BOLT,WASHER HEAD		3	3			
116 00118	09024-40180	SCREW,AIR BLEEDER		1	1			
116 00119	34461-25239	SCREW,HOLLOW		1	1			
116 00120	94901-81020	WASHER,PLATE		1	1			
116 00121	*	PLATE SHIM		AR	AR			
116 00122	47X01-21700	NAME PLATE		1	1			
116 00123	94903-00030	RIVET		2	2			

NOTE	S4L(FOR T303) ,S4L2(FOR 353)

FIG 117 T300/350NC	FUEL FILTER	P1	Year / Month 2008 / 12	

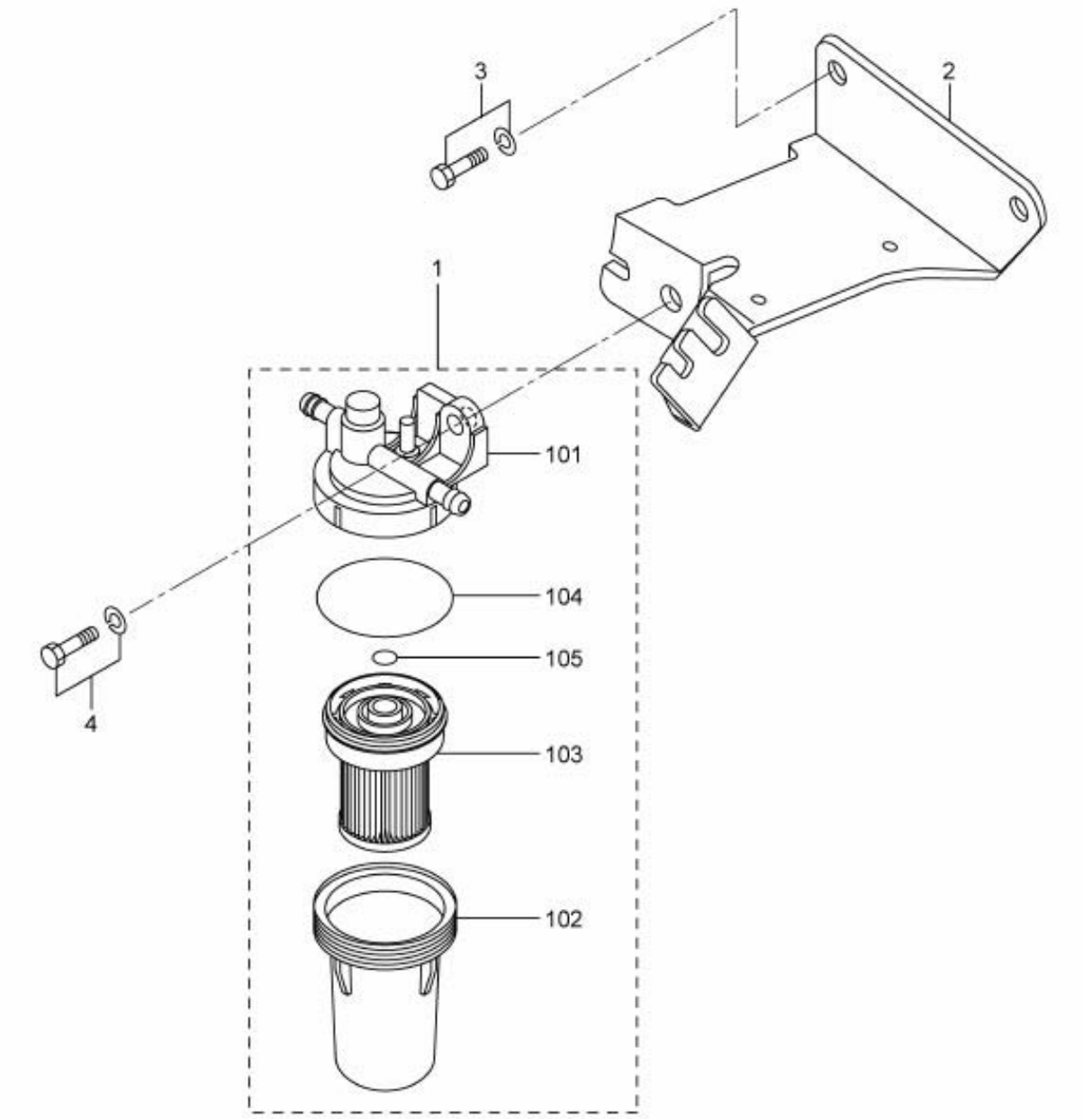

NOTE	S4L(FOR 331),S4L2(FOR 335)

FIG 117 T303NC / T353NC	FUEL FILTER	P1	Year / Month 2008 / 12	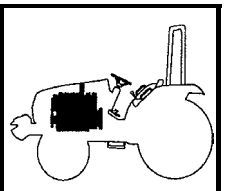

KEY NO.	PART NO.	DESCRIPSTION	SPEC.	QTY.		REPAIR	ENG.SERIAL NO.	REMARKS
				S4L	S4L2			
117 001	31A62-00300	FILTER ASSY,FUEL		1	1	B		
117 00101	31A62-00310	BODY SUB ASSY		1	1			
117 00102	31A62-00312	CAP,FILTER		1	1			
117 00103	31A62-00317	ELEMENT		1	1	A		
117 00104	31A62-00318	O-RING		1	1			
117 00105	31A62-00319	O-RING		1	1			
117 002	31A62-13200	BRACKET,FUEL FILTER		1	1			
117 003	MF240051	BOLT,W/WASHER		2	2			
117 004	MF240053	BOLT,W/WASHER		1	1			

NOTE S4L(FOR T303) ,S4L2(FOR 353)

FIG 118 T300/350NC	GOVERNOR	P1	Year / Month 2008 / 12	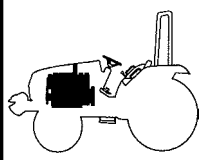

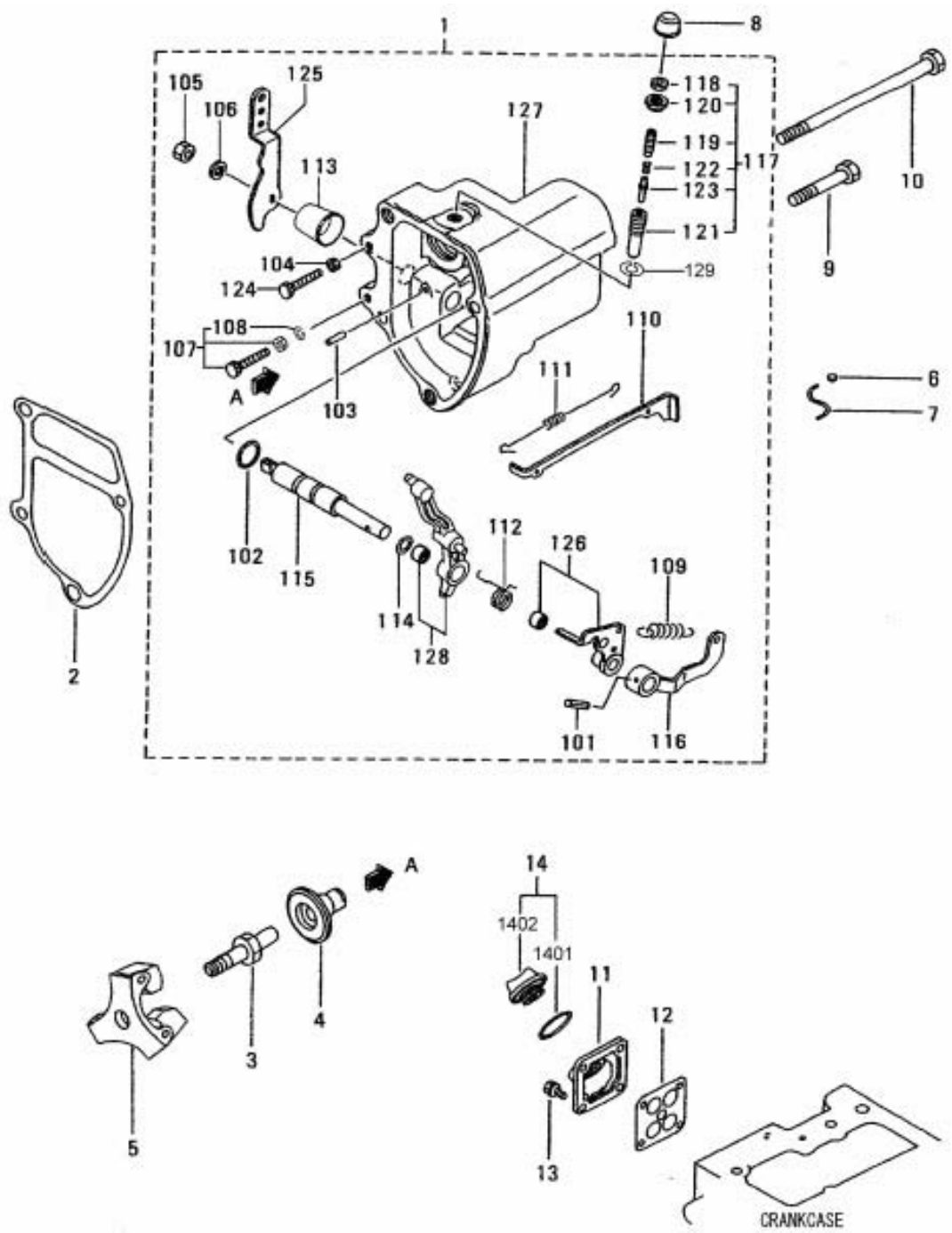

NOTE	S4L(FOR 331),S4L2(FOR 335)

FIG 118 T303NC / T353NC	GOVERNOR	P1	Year / Month 2008 / 12	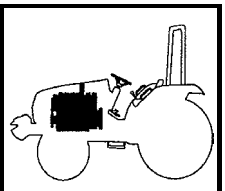

KEY NO.	PART NO.	DESCRIPSTION	SPEC.	QTY.		REPAIR	ENG.SERIAL NO.	REMARKS
				S4L	S4L2			
118 001	31A64-03022	CASE ASSY,GOVERNOR		1	1			
118 00101	F2850-03020	PIN,SPRING		1	1			
118 00102	F3150-01010	O-RING		1	1			
118 00103	K8712630	PIN,GROOVED		1	1			
118 00104	MF430004	NUT		1	1			
118 00105	MF430725	NUT,JAM		1	1			
118 00106	MF450405	WASHER,SPRING		1	1			
118 00107	30L63-00030	BOLT ASSY,HIGH SPEED		1	1			
118 00108	30L63-02600	C-RING,HIGH SPEED		1	1			
118 00109	31A63-03500	SPRING,GOVERNOR		1	1			
118 00110	31A63-00400	TIE-ROD		1	1			
118 00111	31A63-00500	SPRING,TIE-ROD		1	1			
118 00112	31A63-05300	SPRING,START		1	1			
118 00113	31A63-01800	COVER,GOVERNOR		1	1			
118 00114	31A63-15200	SHIM,GOVERNOR SHAFT		1	1			
118 00115	31A63-02600	SHAFT,GOVERNOR		1	1			
118 00116	31A63-02700	LEVER,GOV SPRING		1	1			
118 00117	31A64-01080	SPRING SET,TORQUE		1	1			
118 00118	MD000961	NUT		1	1			
118 00119	MD065628	SCREW,ADJUSTING		1	1			
118 00120	30L63-00600	NUT,TORQUE SET		1	1			
118 00121	31A64-00200	CASE,TORQUE SPRING		1	1			
118 00122	31A64-01800	SPRING,TORQUE		2	2			
118 00123	MM434541	STIPPER,SPRING		1	1			
118 00124	31A63-07901	BOLT,LOW IDLE SET		1	1			
118 00125	31A63-11301	LEVER,SPEED CONTROL		1	1			
118 00126	31A63-01010	LEVER ASSY,TENSION		1	1			
118 00127	31A63-22100	CASE,GOVERNOR		1	1			
118 00128	31A63-15500	LEVER ASSY,GOVERNOR		1	1			
118 00129	30L63-00700	C-RING,TORQUE SET		1	1			
118 002	31A63-12201	GASKET,GOVERNOR CASE		1	1			
118 003	31A63-10305	SHAFT,SLIDING SLEEVE		1	1	B		
118 004	31A63-20201	SLEEVE,SLIDING		1	1			
118 005	31A63-11061	WEIGHT ASSY,GOVERNOR		1	1			
118 006	MK992-00001	METAL		1	1			
118 007	MK993-00240	WIRE		1	1			
118 008	MM433614	CAP,TORQUE SET		1	1			
118 009	MF100064	BOLT		3	3			
118 010	31A63-02301	BOLT,GOVERNOR CASE		1	1			
118 011	MM435288	OIL INLET		1	1			
118 012	MM435249	PROTECTOR,OIL INLET		1	1			
118 013	MF241226	BOLT,W/WASHER		4	4			
118 014	30H42-04020	CAP ASSY,OIL FILLER		1	1			
118 01401	MF520402	O-RING		1	1			
118 01402	*	CAP,OIL FILTER		1	1			

NOTE S4L(FOR T303) ,S4L2(FOR 353)

FIG 119 T300/350NC	ELECTRIC PARTS	P1	Year / Month 2008 / 12	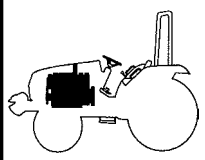

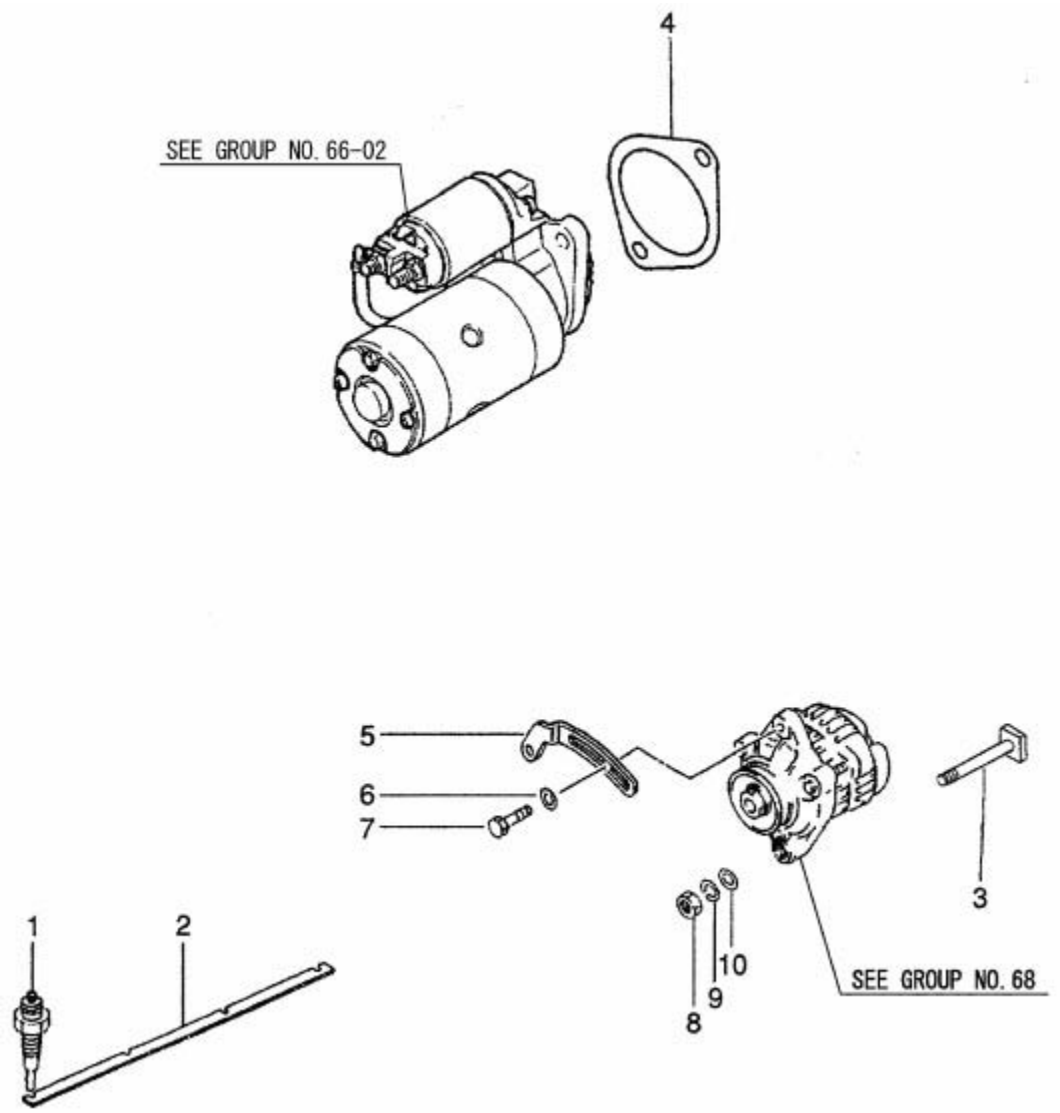

NOTE	S4L(FOR 331),S4L2(FOR 335)

FIG 119 T303NC / T353NC	ELECTRIC PARTS	P1	Year / Month 2008 / 12	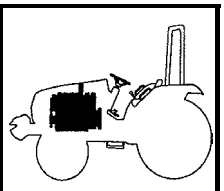

KEY NO.		PART NO.	DESCRIPSTION	SPEC.	QTY.		REPAIR	ENG.SERIAL NO.	REMARKS
					S4L	S4L2			
119	001	32A66-03100	PLUG,GLOW		4	4	B		
119	002	31A66-04101	PLATE,CONNECTION		1	1			
119	003	31A68-20300	BOLT,ALTERNATOR		1	1			
119	004	30A66-00101	GASKET,STARTER		1	1			
119	005	31A68-02100	PLATE,ADJUSTING		1	1			
119	006	MD001521	WASHER		1	1			
119	007	MF140026	BOLT,FLANGE		1	1			
119	008	MF430006	NUT		1	1			
119	009	MF450406	WASHER,SPRING		1	1			
119	010	MF450006	WASHER,PLAIN		1	1			

NOTE	S4L(FOR T303) ,S4L2(FOR 353)

FIG 120 T300/350NC	STARTER	P1	Year / Month 2008 / 12	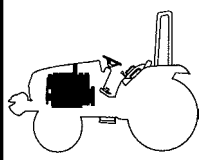

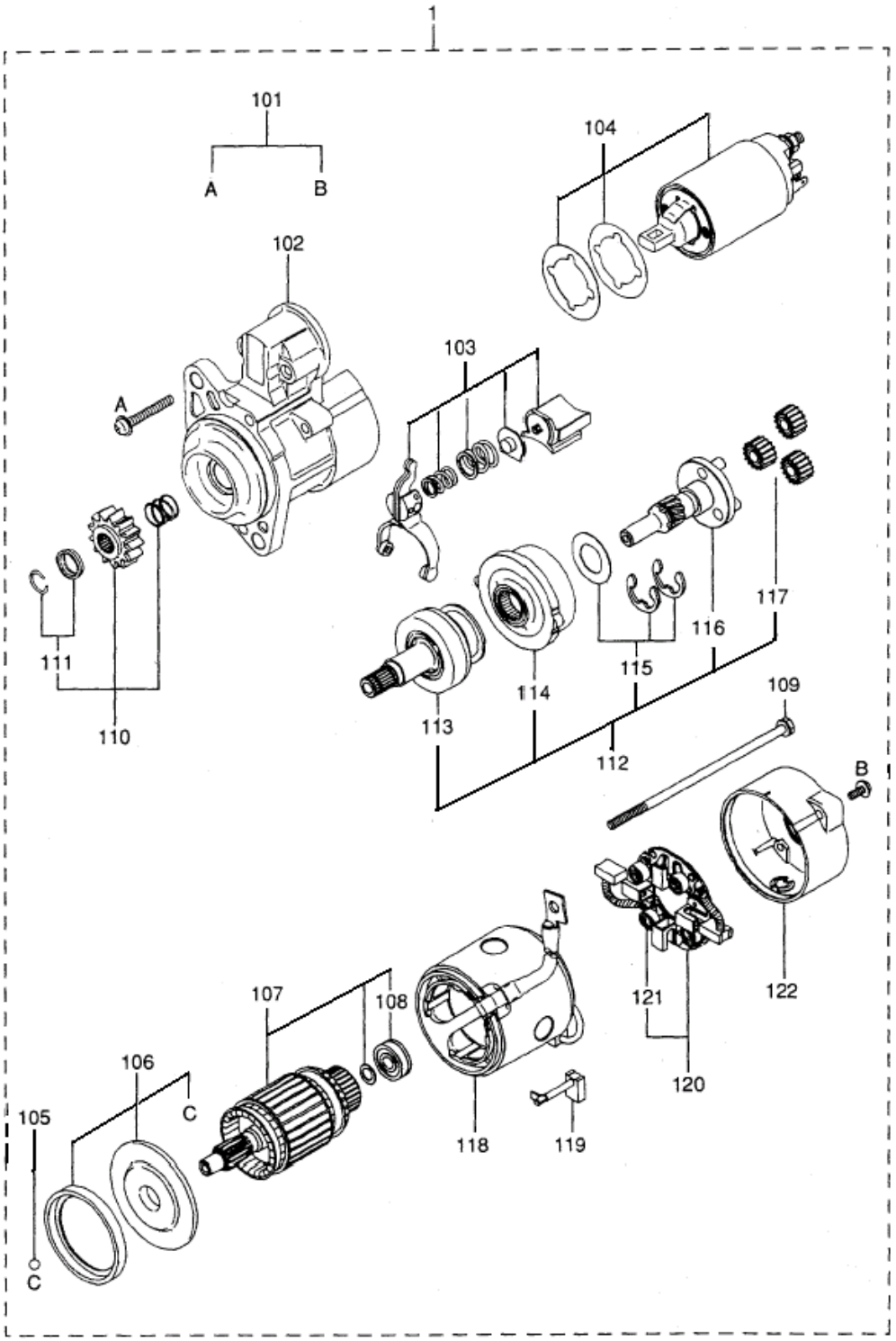

NOTE	S4L(FOR 331),S4L2(FOR 335)

FIG 120 T303NC / T353NC	STARTER	P1	Year / Month 2008 / 12	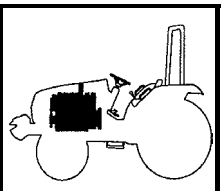

KEY NO.		PART NO.	DESCRIPSTION	SPEC.	QTY.		REPAIR	ENG.SERIAL NO.	REMARKS
					S4L	S4L2			
120	001	31A66-00102	STARTER ASSY	M008T70471A MEC	1	1			
120	00101	M414X-04875	SCREW SET		1	1			
120	00102	M641X-D2471	BRACKET ASSY,FRONT		1	1			
120	00103	M863X-08871	LEVER ASSY,SET		1	1			
120	00104	M372X-03271	SWITCH ASSY		1	1			
120	00105	S409S-00008	BALL		1	1			
120	00106	M578X-29171	PACKING SET		1	1			
120	00107	M106X-43572	ARMATURE ASSY		1	1			
120	00108	M931X-01270	BEARING		1	1			
120	00109	M901X-00371	BOLT SET		1	1			
120	00110	M605X-75371	PINION SET		1	1			
120	00111	M385X-03771	STOPPER SET		1	1			
120	00112	M357X-91974	SHAFT ASSY,CLUTCH		1	1			
120	00113	M191X-94271	CLUTCH,OVER RUNNING		1	1			
120	00114	M135X-01581	GEAR ASSY,INTERNAL		1	1			
120	00115	M982X-38871	WASHER SET		1	1			
120	00116	M357X-66485	SHAFT ASSY,GEAR		1	1			
120	00117	M230X-00471	GEAR ASSY		3	3			
120	00118	M800X-73876	YOKE ASSY		1	1			
120	00119	M648X-40771	BRUSH		2	2			
120	00120	M649X-20471	HOLDER ASSY,BRUSH		1	1			
120	00121	M391X-04371	SPRING,BRUSH		4	4			
120	00122	M642X-35771	BRACKET ASSY,REAR		1	1			

NOTE	S4L(FOR T303) ,S4L2(FOR 353)

FIG 121 T300/350NC	ALTERNATOR	P1	Year / Month 2008 / 12	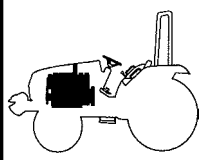

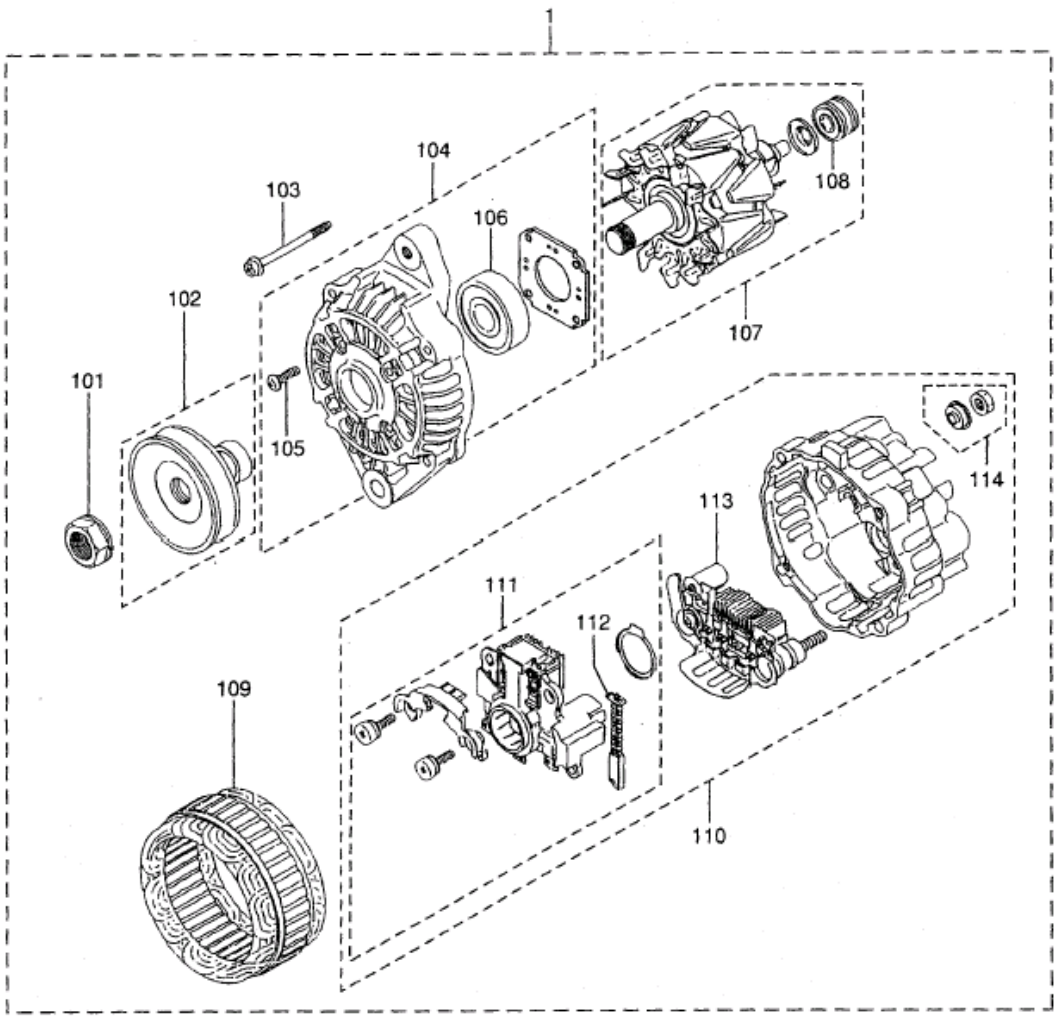

NOTE	S4L(FOR 331),S4L2(FOR 335)

FIG 121 T303NC / T353NC	ALTERNATOR	P1	Year / Month 2008 / 12	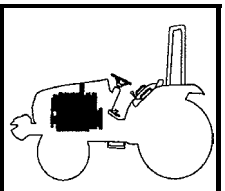

KEY NO.		PART NO.	DESCRIPSTION	SPEC.	QTY.		REPAIR	ENG.SERIAL NO.	REMARKS
					S4L	S4L2			
121	001	31A68-00402	ALTERNATOR ASSY	A007T02071C MEC	1	1	B		
121	00101	A981X-20771	NUT SET		1	1			
121	00102	A628T-62170	PULLEY ASSY		1	1			
121	00103	A414X-19271	BOLT SET		1	1			
121	00104	A640X-67070	BRACKET ASSY,FRONT		1	1			
121	00105	A414X-21271	SCREW SET		1	1			
121	00106	A930X-94570	BEARING,FRONT		1	1			
121	00107	A880X-83770	ROTOR ASSY		1	1			
121	00108	S930P-63670	BEARING,REAR		1	1			
121	00109	A383X-56570	STATOR ASSY		1	1			
121	00110	A642X-A9970	BRACKET ASSY,REAR		1	1			
121	00111	A866X-44682	REGULATOR SET		1	1			
121	00112	A647X-50170	BRUSH SET		2	2			
121	00113	A860T-40670	RECTIFIER ASSY		1	1			
121	00114	A529X-07871	NUT SET		1	1			

NOTE	S4L(FOR T303) ,S4L2(FOR 353)

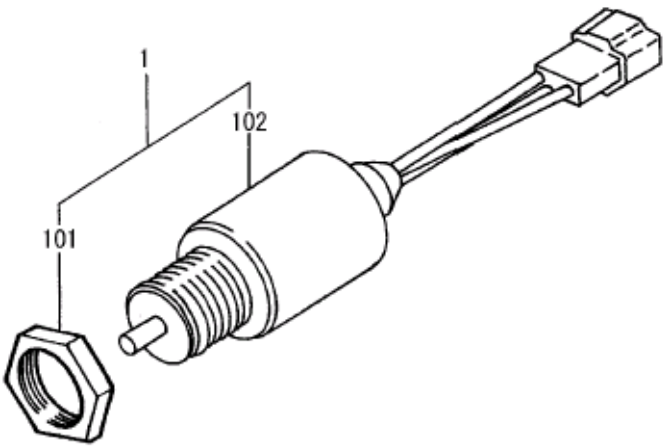

NOTE	S4L(FOR 331),S4L2(FOR 335)

FIG 122 T303NC / T353NC	CONTROL SYSTEM	P1	Year / Month 2008 / 12	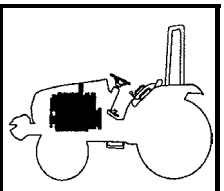

KEY NO.		PART NO.	DESCRIPSTION	SPEC.	QTY.		REPAIR	ENG.SERIAL NO.	REMARKS
					S4L	S4L2			
122	001	30A87-10042	SOLENOID & NUT SET		1	1			
122	00101	MM409671	NUT		1	1	B		
122	00102	30A87-20402	SOLENOID ASSY		1	1			

NOTE S4L(FOR T303) ,S4L2(FOR 353)

FIG 123 T300/350NC	INSTRUMENT	P1	Year / Month 2008 / 12	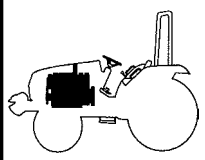

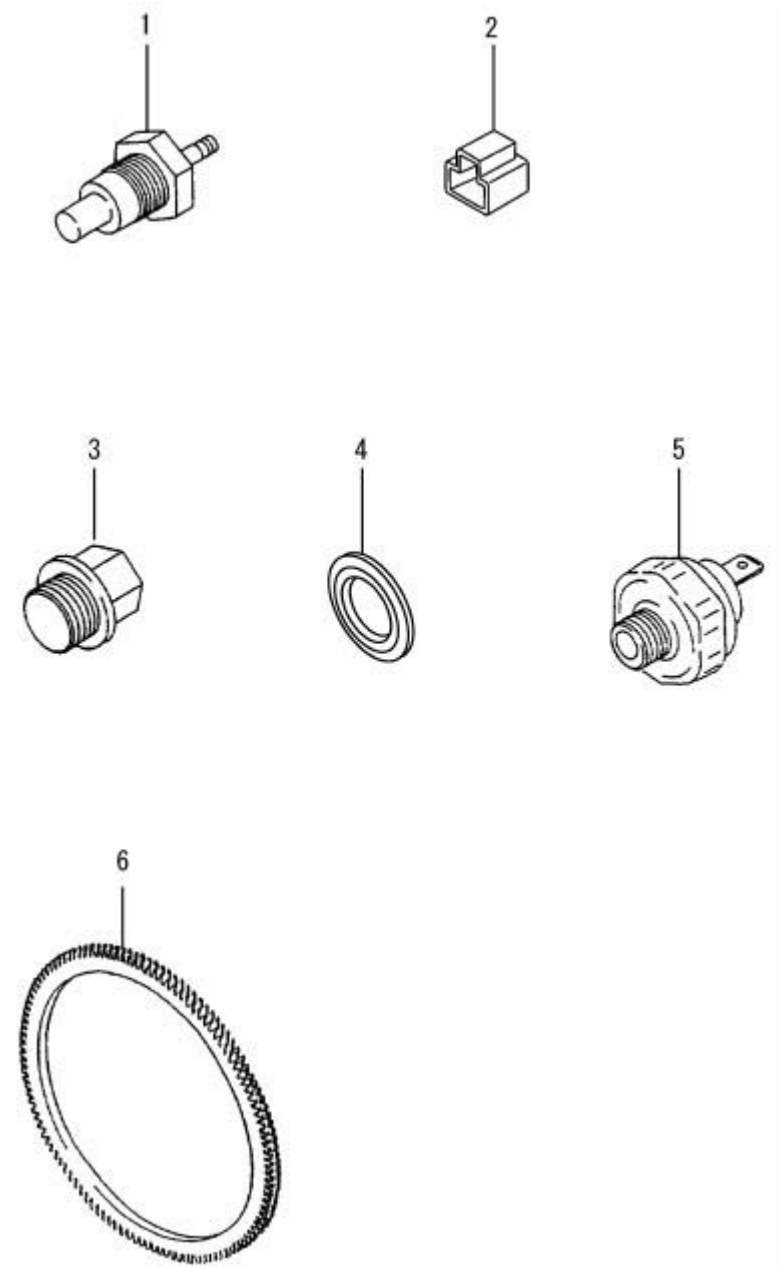

NOTE	S4L(FOR 331),S4L2(FOR 335)

FIG 123 T303NC / T353NC	INSTRUMENT	P1	Year / Month 2008 / 12	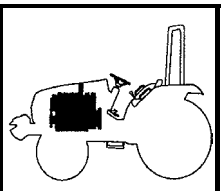

KEY NO.		PART NO.	DESCRIPSTION	SPEC.	QTY.		REPAIR	ENG.SERIAL NO.	REMARKS
					S4L	S4L2			
123	001	05204-50200	UNIT,SENDER		1	1			
123	002	30A87-00600	CONNECTOR		1	1			
123	003	MM316248	PLUG,DRAIN		1	1			
123	004	05946-01601	WASHER SEALING		1	1			
123	005	31A90-00300	SWITCH,OIL PRESSURE		1	1			
123	006	MD040556	GEAR,RING FLYWHEEL	Z=110	1	1			

NOTE	S4L(FOR T303) ,S4L2(FOR 353)

FIG 124 T300/350NC	OVERHAUL GASKET KIT	P1	Year / Month 2008 / 12	

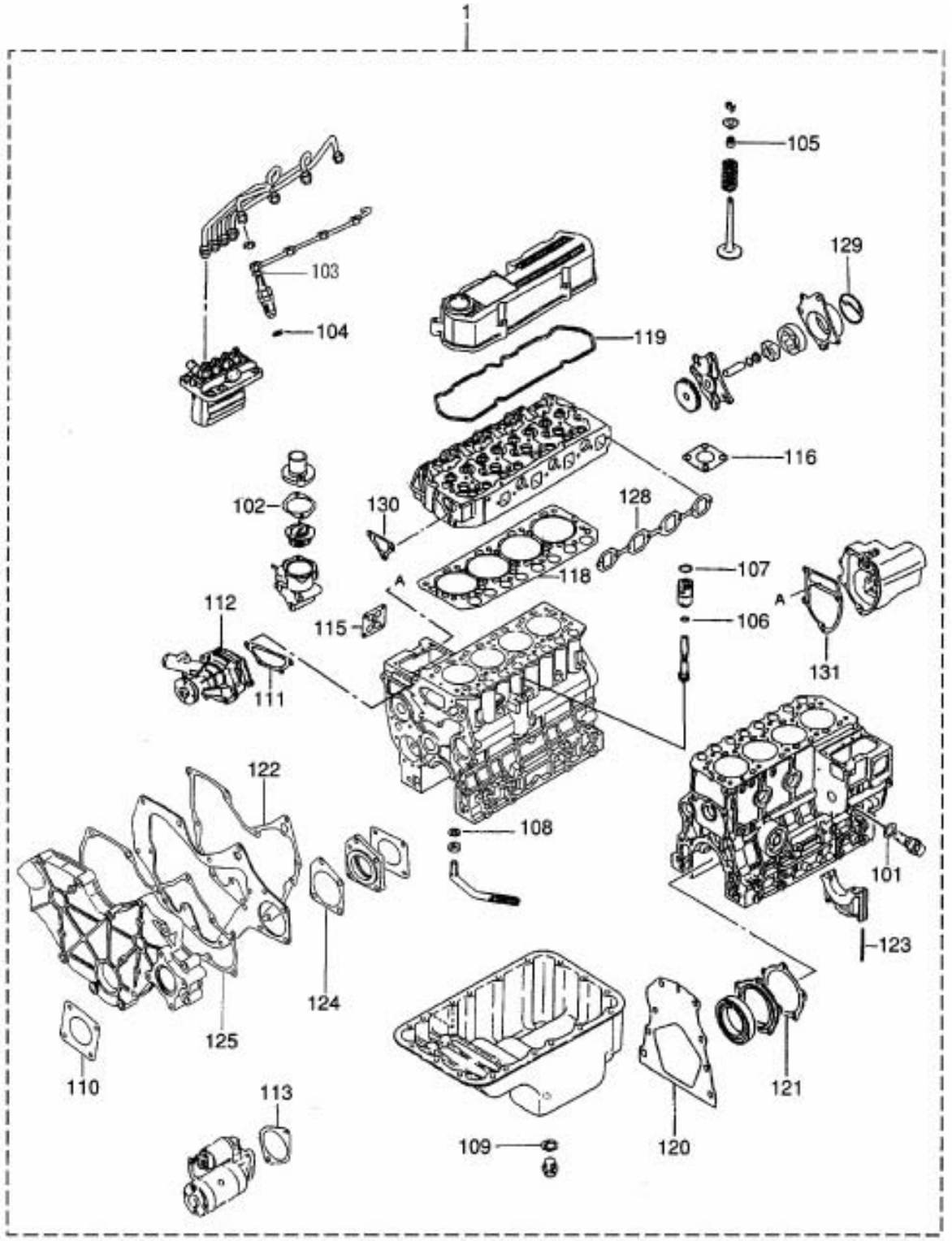

NOTE	S4L(FOR 331),S4L2(FOR 335)

FIG 124 T303NC / T353NC	OVERHAUL GASKET KIT	P1	Year / Month 2008 / 12	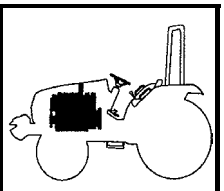

KEY NO.	PART NO.	DESCRIPSTION	SPEC.	QTY.		REPAIR	ENG.SERIAL NO.	REMARKS
				S4L	S4L2			
124 001	31A94-06010	GASKET KIT,OVERHAUL		1	1	B		
124 00101	34340-00700	GASKET		1	1	B		
124 00102	31A46-11200	GASKET,THERMOSTAT		1	1	B		
124 00103	MD068355	GASKET,FUEL RETURN		4	4	B		
124 00104	MD070717	GASKET,HOLDER		4	4	B		
124 00105	MD115472	SEAL,VALVE STEM		8	8	B		
124 00106	MD701788	O-RING		1	1	B		
124 00107	MF520012	O-RING		1	1	B		
124 00108	MF660036	GASKET		1	1	B		
124 00109	MF660065	GASKET,OIL DRAIN		2	2	B		
124 00110	30A11-00101	GASKET,O/PUMP COVER		3	3	B		
124 00111	30H45-00101	GASKET,WATER PUMP		1	1	B		
124 00112	MM409326	GASKET,WATER PUMP		1	1	B		
124 00113	30A66-00101	GASKET,STARTER		1	1	B		
124 00114	F3153-06000	O-RING,FILTER CUP	NOT SHOWN	1	1	B		
124 00115	MM435249	PROTECTOR,OIL INLET		1	1	B		
124 00116	30A30-00200	GASKET,MUFFLER		2	2	B		
124 00117	05946-01601	WASHER,SEALING	NOT SHOWN	4	4	B		
124 00118	31A01-33300	GASKET,CYLINDER HEAD		1	1	B		
124 00119	31A04-33202	GASKET,ROCKER COVER		1	1	B		
124 00120	31A07-02401	GASKET,REAR		1	1	B		
124 00121	31A07-11701	GASKET,OIL SEAL CASE		1	1	B		
124 00122	31A07-11901	GASKET,FRONT PLATE		1	1	B		
124 00123	31A07-12200	SEAL,SIDE		4	4	B		
124 00124	31A11-05201	GASKET,HOUSING		1	1	B		
124 00125	31A11-11101	GASKET,GEAR		1	1	B		
124 00126	31A30-00801	GASKET,INLET PIPE	NOT SHOWN	1	1	B		
124 00127	31A30-10902	GASKET,INLET COVER	NOT SHOWN	1	1	B		
124 00128	31A32-01200	GASKET,EXHAUST		1	1	B		
124 00129	31A35-02300	PACKING,BODY		1	1	B		
124 00130	31A46-10101	GASKET,THERMO CASE		1	1	B		
124 00131	31A63-12201	GASKET,GOVERNOR CASE		1	1	B		
124 00132	32A91-05100	GASKET,LIQUID	NOT SHOWN	1	1	B		
124 00133	MD050317	GASKET,OIL DRAIN	NOT SHOWN	2	2	B		
124 00134	49168-15200	GASKET	NOT SHOWN	3	3	B		
124 00135	MM434046	GASKET,TURBO	NOT SHOWN	1	1	B		
124 00136	MF660063	GASKET	NOT SHOWN	2	2	B		
124 00137	32C39-00200	O-RING,OIL COOLER	NOT SHOWN	1	1	B		
124 00138	MF520004	O-RING,LEVEL GAGE	NOT SHOWN	1	1	B		
124 00139	30A63-00101	GASKET,TIE-ROD COVER	NOT SHOWN	1	1	B		
124 00140	F4202-14000	GASKET	NOT SHOWN	2	2	B		
124 00141	MD000312	GASKET	NOT SHOWN	2	2	B		

NOTE S4L(FOR T303) ,S4L2(FOR 353)

ENGINE

KEY NO.	PART NO.
104 00201	04826-22000
104 00202	04826-23500
104 020	04827-90130
123 001	05204-50200
114 026	05379-22020
114 027	05379-22030
123 004	05946-01601
124 00117	05946-01601
116 00116	09006-80020
116 00101	09011-05070
116 00104	09013-70130
116 00107	09016-10210
116 00108	09016-30082
116 00109	09016-40172
116 00110	09017-00170
116 00114	09018-30050
116 00111	09021-00440
116 00118	09024-40180
116 00112	09030-10060
103 008	30405-31403
106 010	30A11-00101
124 00110	30A11-00101
108 009	30A19-00040
108 010	30A19-10010
108 011	30A19-10020
108 012	30A19-10030
124 00116	30A30-00200
124 00139	30A63-00101
119 004	30A66-00101
124 00113	30A66-00101
123 002	30A87-00600
122 001	30A87-10042
122 00102	30A87-20402
107 002	30H13-00801
118 014	30H42-04020
113 002	30H45-00101
124 00111	30H45-00101
104 015	30L07-00700
118 00107	30L63-00030
118 00120	30L63-00600
118 00129	30L63-00700
118 00108	30L63-02600
101 00205	31A01-02500
101 00206	31A01-02800
101 004	31A01-11101
101 001	31A01-15011
101 001	31A01-15021
101 005	31A01-33300
124 00116	31A01-33300
101 00208	31A03-13500
101 00208	31A03-13600
102 007	31A04-00700
102 003	31A04-01301
102 00803	31A04-11024
103 001	31A04-20032
102 00809	31A04-21010
102 002	31A04-30200
103 002	31A04-33202
124 00119	31A04-33202
102 00812	31A04-34100
102 00813	31A04-34300
102 001	31A04-40100
103 006	31A05-00031
103 010	31A05-00300
103 011	31A05-01300
104 00203	31A07-00801
105 003	31A07-02300
105 010	31A07-02401
124 00120	31A07-02401
104 018	31A07-02500
104 00204	31A07-03100
105 001	31A07-11601
105 002	31A07-11701
124 00121	31A07-11701
106 002	31A07-11901
124 00122	31A07-11901
104 014	31A07-12200
124 00123	31A07-12200
104 001	31A07-16010
105 006	31A09-01050
105 007	31A09-01060
105 008	31A09-01070
105 009	31A09-01080
106 004	31A11-00802
106 001	31A11-02100
106 008	31A11-05101
106 009	31A11-05201
124 00124	31A11-05201
106 005	31A11-11101
124 00125	31A11-11101
107 001	31A13-03010
108 004	31A17-00010
108 005	31A17-00020
108 006	31A17-00030
108 001	31A17-09100
108 002	31A17-09200
108 003	31A17-09300
108 007	31A17-10602
108 008	31A19-01023
108 008	31A19-10024
108 013	31A20-00103
108 013	31A20-00201
108 018	31A20-22102
108 019	31A21-03800
104 013	31A23-00051
108 020	31A23-01302
109 003	31A23-03020
109 001	31A23-03400
109 004	31A23-03500
109 002	31A23-03600
124 00126	31A30-00801
110 003	31A30-03600
110 004	31A30-03700
110 001	31A30-05030
110 002	31A30-05600
124 00127	31A30-10902
110 007	31A32-00402
110 008	31A32-01200
124 00128	31A32-01200
110 012	31A32-02100
111 00101	31A35-02300
124 00129	31A35-02300
112 001	31A35-05050
111 001	31A35-30010
112 005	31A40-02100
112 006	31A42-10100
113 005	31A45-20700
113 01004	31A46-00020
113 01301	31A46-02600
113 010	31A46-03011
113 013	31A46-05010
113 011	31A46-10101
124 00130	31A46-10101
113 01007	31A46-11200
124 00102	31A46-11200
105 005	31A46-12400
113 006	31A48-00200
114 021	31A60-00300
114 01207	31A61-01200
114 012	31A61-03200
114 004	31A61-07101
114 005	31A61-07201
114 006	31A61-07301
114 007	31A61-07401
114 011	31A61-12600
117 001	31A62-00300
117 00101	31A62-00310
117 00102	31A62-00312
117 00103	31A62-00317
117 00104	31A62-00318

KEY NO.	PART NO.
117 00105	31A62-00319
117 002	31A62-13200
118 00110	31A63-00400
118 00111	31A63-00500
118 00126	31A63-01010
118 00113	31A63-01800
118 010	31A63-02301
118 00115	31A63-02600
118 00116	31A63-02700
118 00109	31A63-03500
118 00112	31A63-05300
118 00124	31A63-07901
118 003	31A63-10305
118 005	31A63-11061
118 00125	31A63-11301
118 002	31A63-12201
124 00131	31A63-12201
118 00114	31A63-15200
118 00128	31A63-15500
118 004	31A63-20201
118 00127	31A63-22100
118 00121	31A64-00200
118 00117	31A64-01080
118 00122	31A64-01800
118 001	31A64-03022
114 020	31A65-00600
102 009	31A65-03090
116 001	31A65-14030
120 001	31A66-00102
119 002	31A66-04101
121 001	31A68-00402
119 005	31A68-02100
119 003	31A68-20300
123 005	31A90-00300
124 001	31A94-06010
114 024	31B61-05200
102 00808	32A04-02401
112 003	32A36-05012
119 001	32A66-03100
124 00132	32A91-05100
102 00814	32C04-04501
102 00815	32C04-06101
124 00137	32C39-00200
112 004	34340-00700
124 00101	34340-00700
116 00119	34461-25239
116 00105	47X01-07700
116 00102	47X01-13200
116 00103	47X01-13300
116 00106	47X01-19900
116 00122	47X01-21700
124 00134	49168-15200
116 00113	90802-20150
116 00120	94501-81020
116 00123	94903-00030
116 00117	94904-80800
121 00109	A383X-56570
121 00103	A414X-19271
121 00105	A414X-21271
121 00116	A529X-07871
121 00102	A628T-62170
121 00104	A640X-67070
121 00110	A642X-A9970
121 00112	A647X-50170
121 00113	A660T-40670
121 00111	A660X-44682
121 00107	A880X-83770
121 00106	A930X-94570
121 00101	A981X-20771
102 00801	F1035-05010
110 010	F1035-08020
107 003	F1035-08040
102 00804	F2325-08000
107 004	F2515-08000
104 016	F2846-05000
118 00101	F2850-03020
118 00102	F3150-01010
124 00114	F3153-06000
124 00140	F4202-14000
113 01302	F4300-02000
113 01001	K6516441
118 00103	KB712630
120 00107	M106X-43572
120 00114	M135X-01581
120 00113	M191X-94271
120 00117	M230X-00471
120 00116	M357X-66485
120 00112	M357X-91974
120 00104	M372X-03271
120 00111	M385X-03771
120 00121	M391X-04371
120 00101	M414X-04875
120 00106	M578X-29171
120 00110	M605X-75371
120 00102	M641X-D2471
120 00122	M642X-35771
120 00119	M648X-40771
120 00120	M649X-20471
120 00118	M800X-73876
120 00103	M883X-08871
120 00109	M901X-00371
120 00108	M931X-01270
120 00115	M982X-38871
101 00201	MD000245
124 00141	MD000312
102 011	MD000425
118 00118	MD000961
119 006	MD001521
108 00801	MD006704
106 007	MD008762
103 005	MD008784
102 005	MD016483
108 00802	MD021105
102 00810	MD021204
104 017	MD024256
123 006	MD040556
113 009	MD041704
124 00133	MD050317
118 00119	MD065628
114 003	MD068353
114 002	MD068355
124 00103	MD068355
114 001	MD070717
124 00104	MD070717
114 023	MD107589
102 006	MD115472
124 00105	MD115472
115 00103	MD603490
115 00103	MD603491
115 00103	MD603492
115 00103	MD603493
115 00103	MD603494
115 00103	MD603495
115 00103	MD603496
115 00103	MD603497
115 00103	MD603498
115 00103	MD603499
115 00107	MD603660
112 00701	MD701788
124 00106	MD701788
112 008	MD701789
102 010	MD703856
109 005	MD712517
105 004	MF100055
114 018	MF100055
106 006	MF100064
118 009	MF100064
104 019	MF100110
111 002	MF101256
110 011	MF101286
119 007	MF140026
113 01002	MF140227
113 00101	MF240031
103 009	MF240051
106 003	MF240051
117 003	MF240051
117 004	MF240053
112 009	MF241223
118 013	MF241226
113 008	MF241229
114 022	MF241229
102 013	MF241251
110 006	MF241253
106 011	MF241257
110 005	MF241259
103 004	MF241261
113 012	MF241266
101 007	MF241280
114 010	MF243628
113 003	MF244860
113 004	MF244863
110 009	MF401936
118 00104	MF430004
119 008	MF430006
108 017	MF430126
118 00105	MF430725
112 00101	MF430729
119 010	MF450006
108 015	MF450010
118 00106	MF450405
119 009	MF450406
108 016	MF450410
104 011	MF472404
112 00702	MF472535
102 012	MF476018
103 007	MF476215
108 014	MF476215
124 00138	MF520004
112 00703	MF520012
124 00107	MF520012
118 01401	MF520402
102 00802	MF522010
112 00103	MF660036
124 00108	MF660036
124 00136	MF660063
107 00101	MF660065
124 00109	MF660065
107 00102	MF665004
104 010	MF665511
104 004	MF665532
104 005	MF665533
101 00202	MF665538
114 019	MK661-14000
118 006	MK992-00001
118 007	MK993-00240
123 003	MM316248
103 012	MM400380
114 01201	MM400886
112 00704	MM407171
101 006	MM408470
114 017	MM409031
114 013	MM409036
114 014	MM409037
114 015	MM409038
114 016	MM409039
114 025	MM409276
113 001	MM409303
113 00102	MM409304
113 01003	MM409-31302
113 00103	MM409326
124 00112	MM409326
113 00104	MM409327
104 012	MM409645
122 00101	MM409671
114 01202	MM430130
112 00705	MM430-41901
112 007	MM430-59801
104 003	MM430613
114 009	MM430614
114 006	MM430703
102 004	MM433-30601
118 008	MM433614
124 00135	MM434046
113 007	MM434493
118 00123	MM434541
118 012	MM435249
124 00115	MM435249
118 011	MM435288
115 001	MM435-94101
116 00115	MM500232
115 00105	MM501838
115 00106	MM501841
115 00108	MM501916
115 00101	MM514045
115 00104	MM514047
115 00102	MM514048
106 014	MS401426
106 012	MS401427
106 013	MS401435
103 003	MS470059
104 007	MS471104
104 008	MS471105
104 009	MS471110
114 01203	MS602063
114 02501	MS603016
114 02401	MS603029
114 01204	MS604043
114 01205	MS660163
114 02402	MS660164
114 02502	MS660164
114 01206	MS660169
101 003	MS661140
104 006	MS661140
104 021	MS661142
120 00105	S40IS-00008
121 00108	S93GF-63670

FIG 201 T300/ T350NC	AIR CLEANER	P1	Year / Month 2008 / 12	

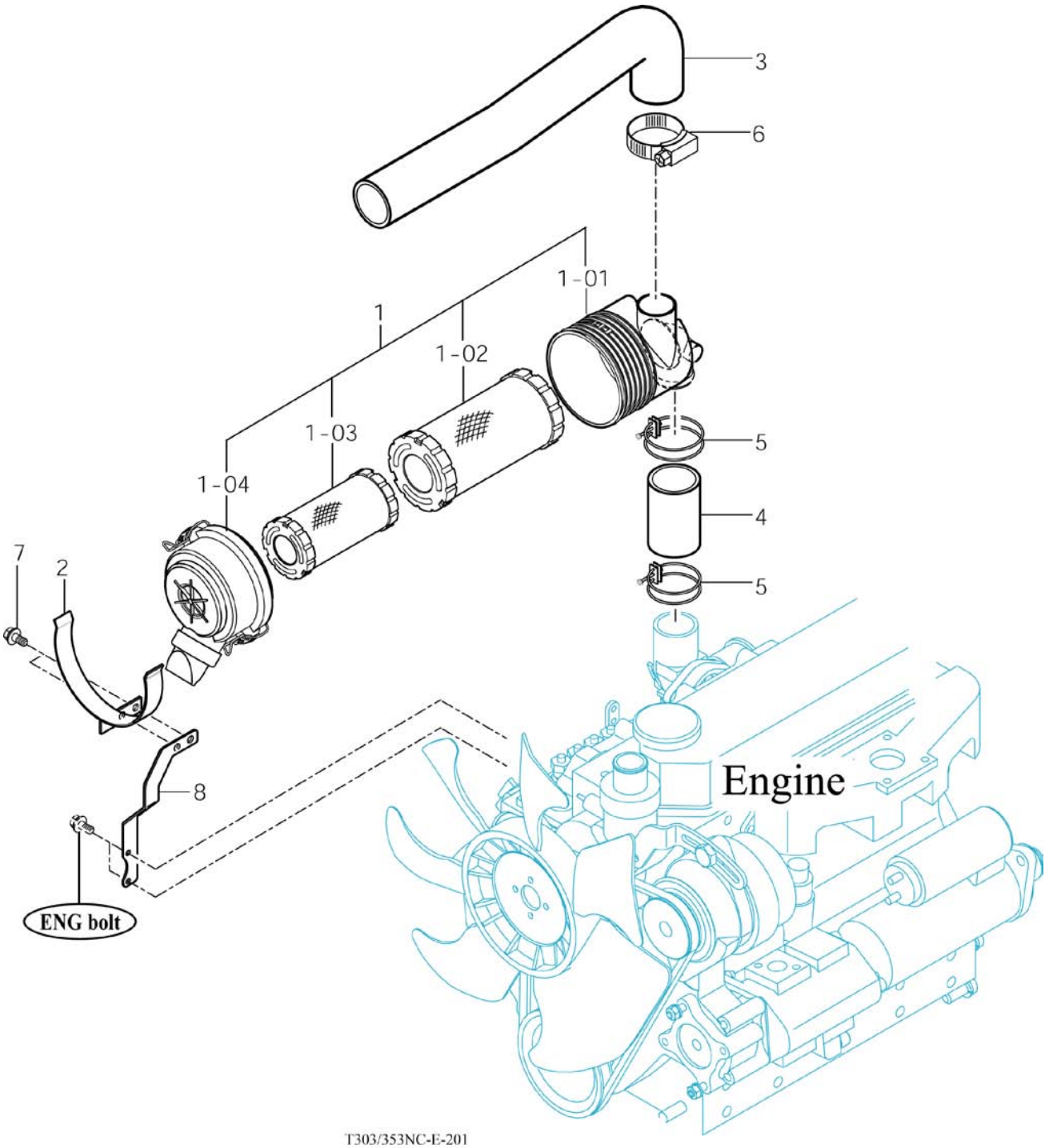

NOTE	

FIG 201 T300NC / T350NC	AIR CLEANER	P1	Year / Month 2008 / 12	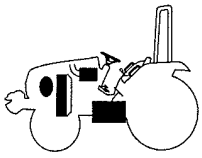

KEY NO.		PART NO.	DESCRIPSTION	SPEC.	QTY.	REPAIR	EFFECTIVE DATE	REMARKS
201	001	13151035001	AIR CLEANER SUB ASSY,G057512		1			
201	00101	13151035010	.BODY ASSY,P533762		1			
201	00102	13151035020	.ELEMENT ASSY,P821575		1			
201	00103	13151035040	.ELEMENT ASSY,P822858		1			
201	00104	13151035030	.COVER ASSY,P533761		1			
201	002	13151032300	BRACKET COMP , GUIDE		1			
201	003	13251030021	HOSE , AIR INLET		1	C		
201	004	13251030031	HOSE , AIR OUTLET		1	C		
201	005	14151010401	CLIP, 64		2	A		
201	006	15645100100	CLAMP , WORM 65		1	A		
201	007	V2173608020	BOLT , HEX /SP	M8X20	2			
201	008	13251032201GB	PLATE , STAY		1			

NOTE	

FIG 202 T300/ T350NC	RADIATOR	P1	Year / Month 2008 / 12	

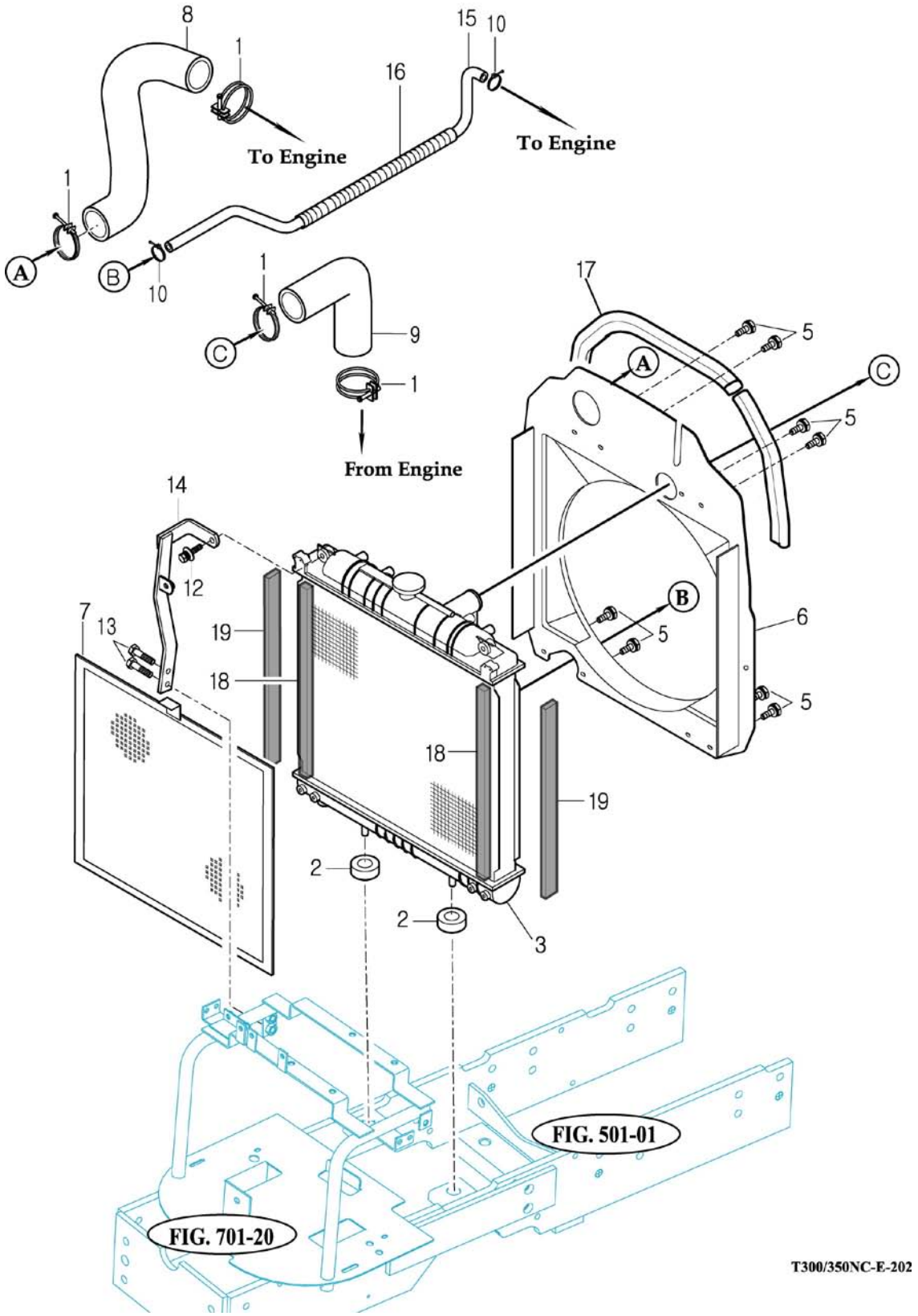

NOTE	

FIG 202 T300NC / T350NC			RADIATOR			P1	Year / Month 2008 /12	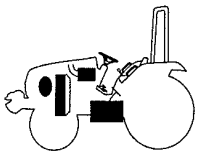
KEY NO.		TYM PART NO.	DESCRIPSTION	SPEC.	QTY.	REPAIR	EFFECTIVE DATE	REMARKS
202	001	14241010040	CLIP , 45		4			
202	002	14526210301	CUSHION RUBBER , RADIATOR		2			
202	003	13011042100	RADIATOR SET		1			
202	005	V2323606016	BOLT , C/R HEX/SP		8			
202	006	13211042200	SHROUD		1			
202	007	13011042300GB	NET COMP		1			
202	008	13011040020	HOSE . RADIATOR		1			
202	009	13011040010	HOSE , RADIATOR		1			
202	012	V2193606025	BOLT , HEX/SPL		1			
202	013	V2183608025	BOLT , HEX/SP		2			
202	014	13011062101GB	BRACKET COMP , FIX RADIATOR		1			
202	015	14941040141	HOSE		1			
202	016	14571020070	TUBE , CORRUGATE 180		1			
202	017	13011040321	INSULATOR, RADIATOR		1			
202	018	14521042360	SPONGE , FRONT		2			
202	019	14521042341	SPONGE , SIDE		2			

NOTE	

FIG 203 T300/ T350NC	MUFFLER	P1	Year / Month 2008 / 12	

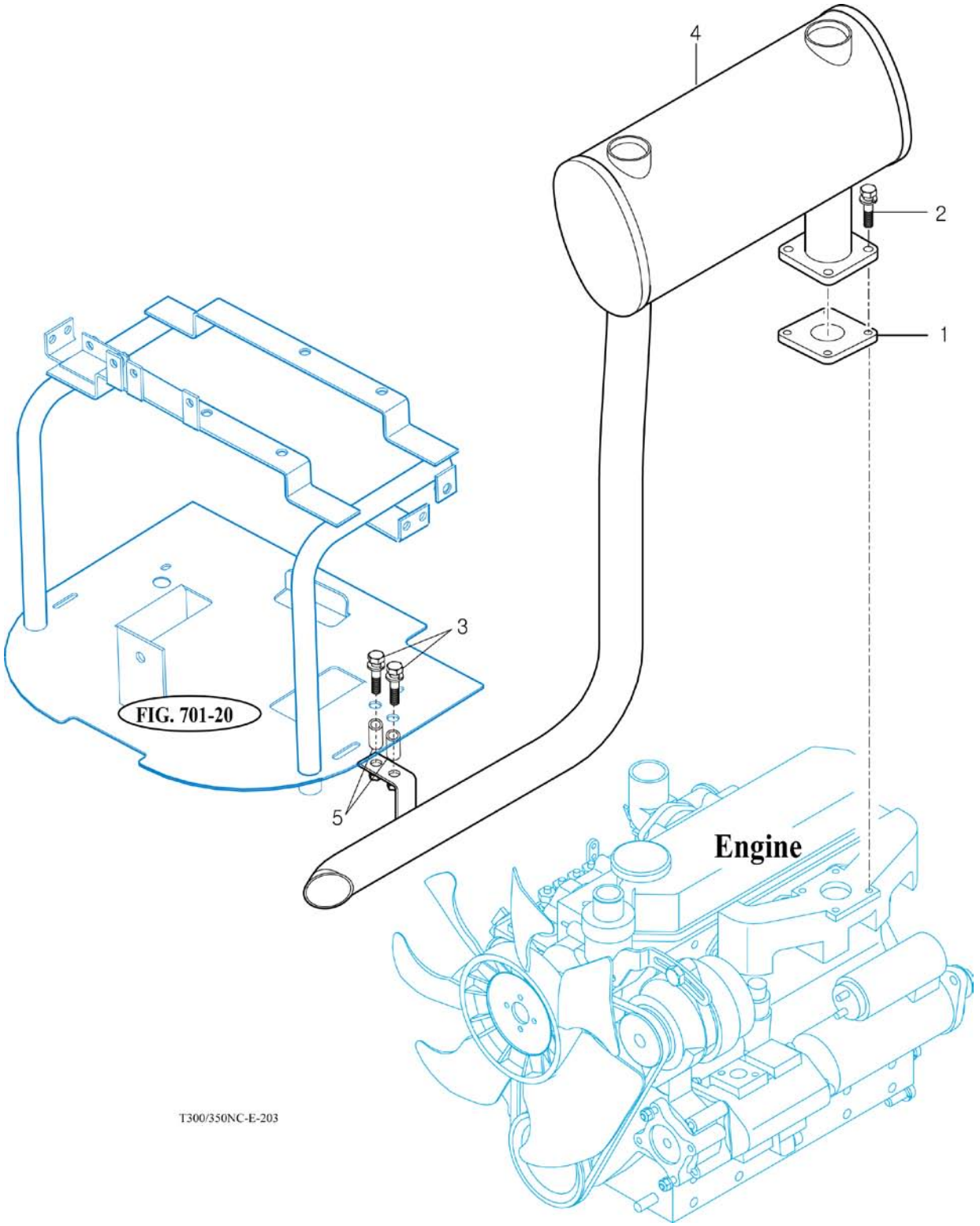

NOTE	

FIG 203 T300NC / T350NC	MUFFLER	P1	Year / Month 2008 / 12	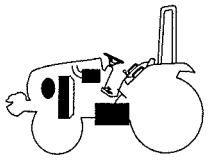

KEY NO.		PART NO.	DESCRIPSTION	SPEC.	QTY.	REPAIR	EFFECTIVE DATE	REMARKS
203	001	15001030011	GASKET		1			
203	002	V2173608025	BOLT , HEX/S	M8X25	4			
203	003	V2173608030	BOLT , HEX/S	M8X30	2			
203	004	13011052000DD	MUFFLER COMP		1			
203	005	19026010020	COLLAR , 10X12X08		2			

NOTE	

FIG 204 T300/ T350NC	FUEL TANK	P1	Year / Month 2008 / 12	

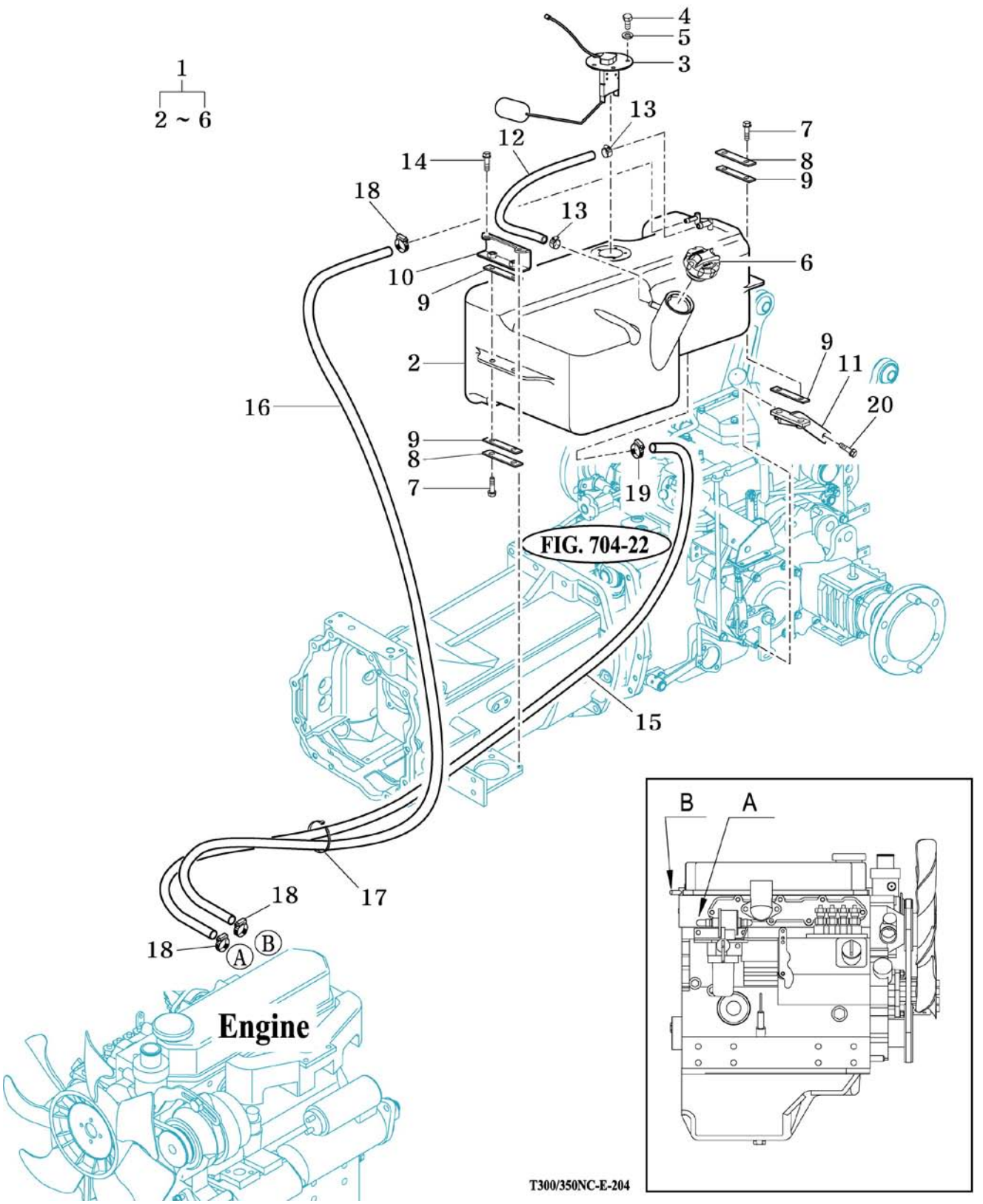

NOTE

FIG 204 T300NC / T350NC	FUEL TANK	P1	Year / Month 2008 / 12	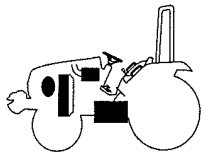

KEY NO.	PART NO.	DESCRIPSTION	SPEC.	QTY.	REPAIR	EFFECTIVE DATE	REMARKS
204 001	13211112000	TANK SUB , FUEL		1	B		
204 002	13211112100	TANK COMP , FUEL		1	A		
204 003	13216642300	GAUGE ASSY , FUELTANK		1			
204 004	V2053605012	BOLT , HEX C/R	M5X12	5			
204 005	V4011600050	WASHER , SPRING	M5	5			
204 006	19143102200	CAP ASSY , TANK		1			
204 007	V2173608030	BOLT , HEX/S	M8X30	4			
204 008	16991112190	PLATE		2			
204 009	16991110030	INSULATOR		4			
204 010	13211113100GB	BRACKET COMP , TANK FRONT		1			
204 011	13211113200GB	BRACKET COMP , TANK REAR		1			
204 012	13211113500	HOSE , BREATHER(500)		1			
204 013	14501410050	CLAMP , WORM 14.5		2			
204 014	V2173608020	BOLT , HEX/S		2			
204 015	14521113400	FUEL HOSE , INJ PUMP		1			
204 016	17971112202	HOSE ASSY , 1170		1			
204 017	13764020030	BAND , 140		3			
204 018	14501410050	CLAMP , WORM 14.5		3			
204 019	37481850030	BAND , HOSE 18.5		1			
204 020	V2173608025	BOLT , HEX/S	M8X25	2			

NOTE	

FIG 205 T300/ T350NC	ACCELERATOR	P1	Year / Month 2008 / 12	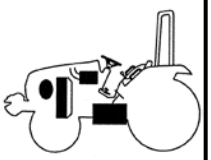

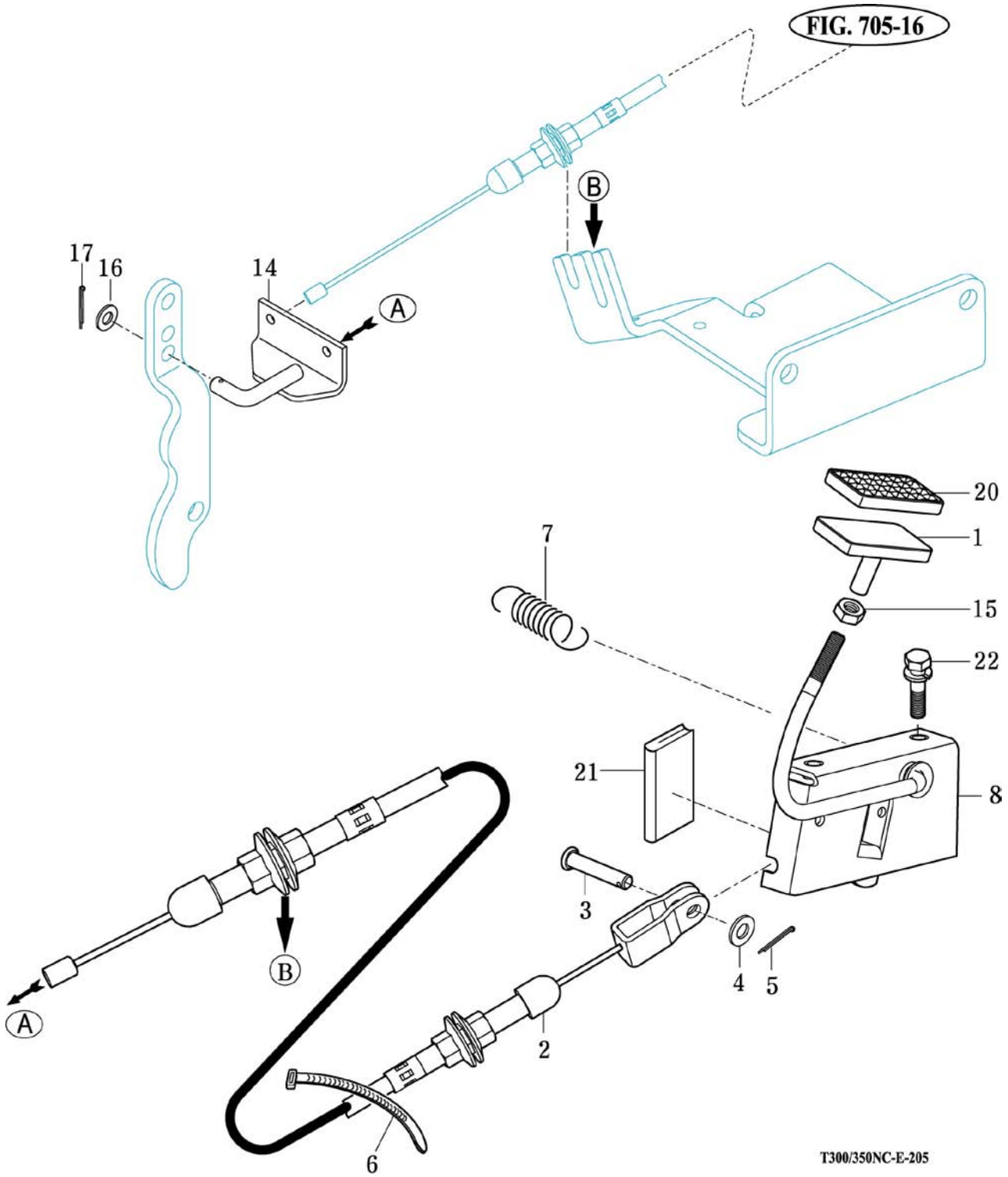

NOTE	

FIG 205 T300NC / T350NC	ACCELERATOR	P1	Year / Month 2008 / 12	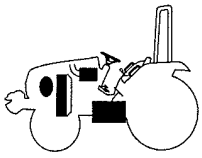

KEY NO.	PART NO.	DESCRIPSTION	SPEC.	QTY.	REPAIR	EFFECTIVE DATE	REMARKS
205 001	16001220000GB	PLATE COMP , ACCELERATOR		1			
205 002	14941162100	CABLE ASSY , ACCELERATOR		1	C		
205 003	15601160083	PIN , 06X16		1			
205 004	V4111600060	WASHER , PLAIN	M6	1			
205 005	V5001920020	PIN , SPLIT	2X20	1			
205 006	13424020060	BAND , 250		1			
205 007	36502200050	SPRING , FOOT PEDAL		1			
205 008	16791162004GB	BRACKET COMP		1			
205 014	14941162200	PLATE COMP		1			
205 015	V3042600080	NUT , HEX/2	M8	1			
205 016	V4111600080	WASHER , PLAIN	M8	1			
205 017	V5001918015	PIN		1			
205 020	16791220010	PAD		1			
205 021	16997021960	INSULATOR , 32		1			
205 022	V2173608020	BOLT , HEX/S	M8X20	2			

NOTE	

FIG 206 T300/ T350NC	FUEL HOSE & FILTER	P1	Year / Month 2008 / 12	

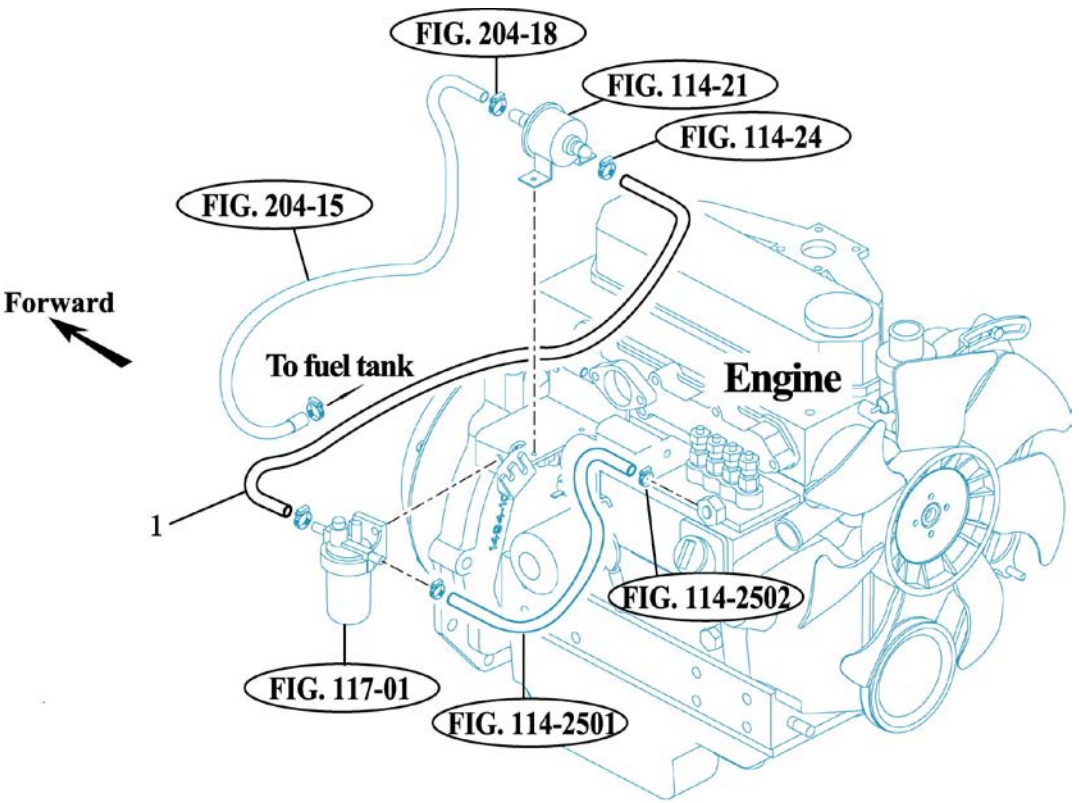

NOTE	

FIG 206 T300NC / T350NC	FUEL HOSE & FILTER	P1	Year / Month 2008 / 12	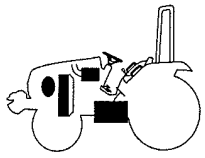

KEY NO.		PART NO.	DESCRIPSTION	SPEC.	QTY.	REPAIR	EFFECTIVE DATE	REMARKS
206	001	13211112300	HOSE ASSY, FUEL(400)		1			

NOTE	

FIG 301 T300/T350NC	CLUTCH PEDAL	P1	Year / Month 2008 / 12	

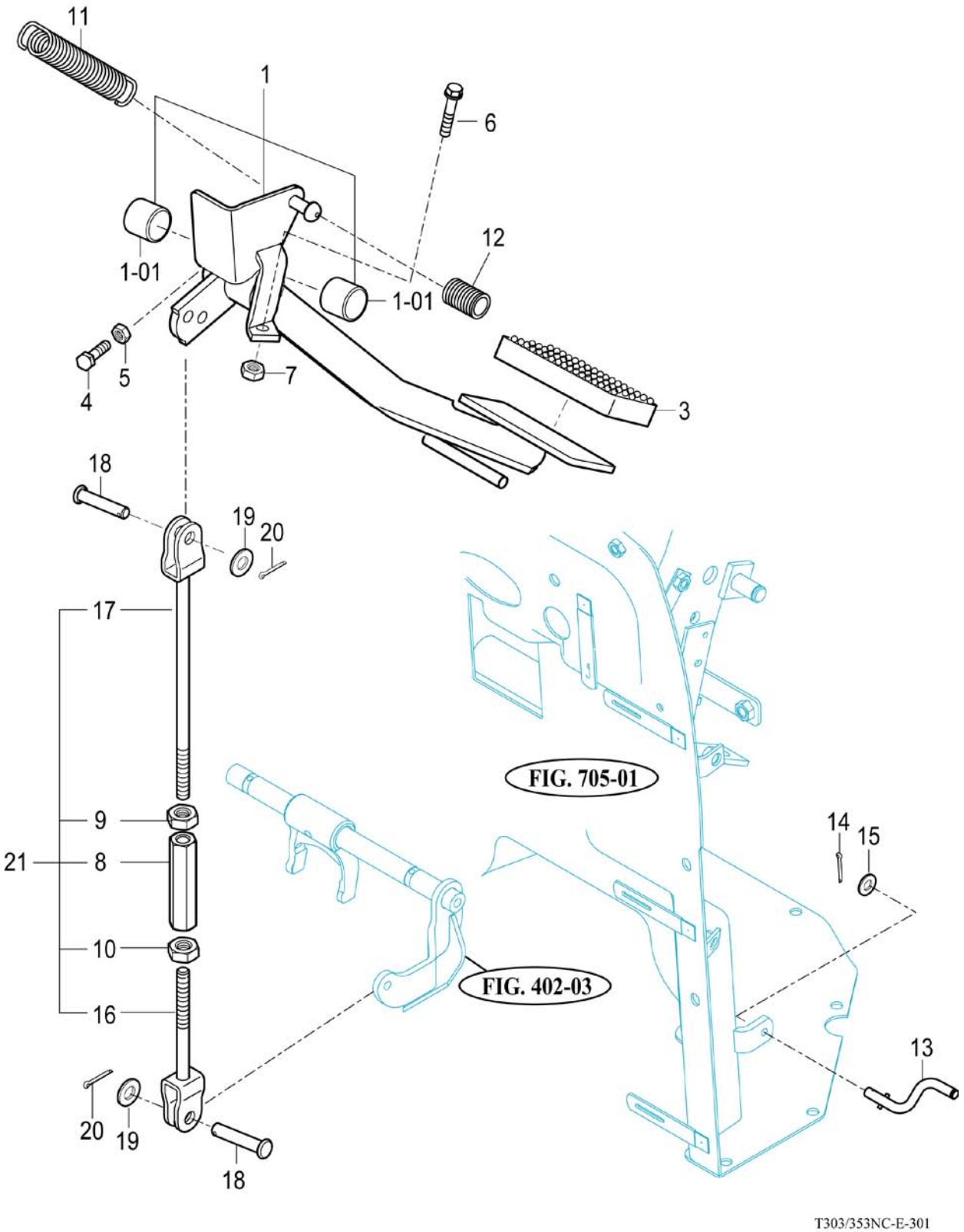

NOTE

FIG 301 T300NC / T350NC	CLUTCH PEDAL	P1	Year / Month 2008 / 12	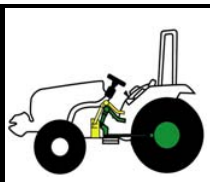

KEY NO.		PART NO.	DESCRIPSTION	SPEC.	QTY.	REPAIR	EFFECTIVE DATE	REMARKS
301	001	14571332000	PEDAL ASSY , CLUTCH		1			
301	002	36707030080	BUSH , 20X23X20		2			
301	003	15241220010	PAD		1	C		
301	004	V2013608030	BOLT , HEX	M8X30	1			
301	005	V3042600080	NUT , HEX/2	M8	1			
301	006	V2013608025	BOLT , HEX	M8X25	1			
301	007	V3042600080	NUT , HEX/2	M8	1			
301	008	16601220020	TURNBUCKLE , M8 L60		1			
301	009	15601320073	NUT , HEX LH		1			
301	010	V3042600080	NUT , HEX/2	M8	1			
301	011	14041200080	RETURN SPRING , CLUTCH		1			
301	012	15601320011	TUBE , CORRUGATE 1050		1			
301	013	15441230050	ROD		1			
301	014	V5001920020	PIN , SPLIT	2X20	1			
301	015	V4111600060	WASHER , PLAIN	M6	1			
301	016	16701333200	ROD COMP , 150		1			
301	017	16701333101	ROD COMP, 174		1			
301	018	14322420010	PIN		2			
301	019	V4111600080	WASHER , PLAIN	M8	2			
301	020	V5001925020	PIN , SPLIT	2.5X20	2			
301	008	16701330001	ROD ASSY , CLUTCH		1			

NOTE	

FIG 302 T300/T350NC	FLYWHEEL & CLUTCH	P1	Year / Month 2008 / 12	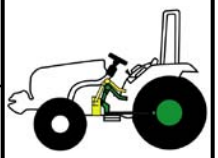

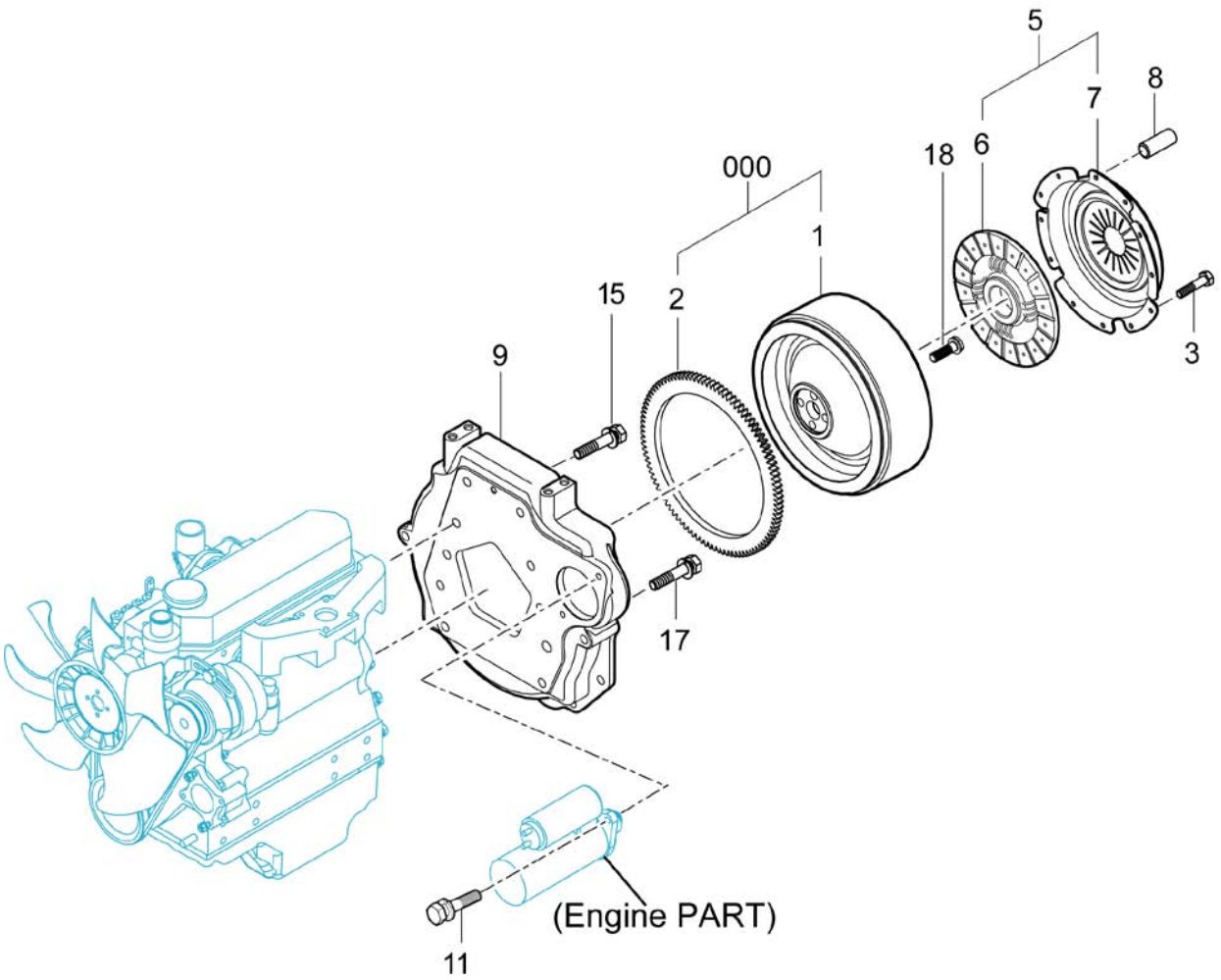

T300/350NC-E-302

NOTE

FIG 302 T300NC / T350NC	FLYWHEEL & CLUTCH	P1	Year / Month 2008 / 12	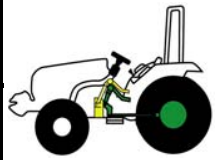

KEY NO.		PART NO.	DESCRIPSTION	SPEC.	QTY.	REPAIR	EFFECTIVE DATE	REMARKS
302	000	14941009800	FLYWHEEL ASSY		1			
302	001	14941010010M	FLYWHEEL		1			
302	002	MD040556	GEAR , RING		1			See ENGINE FIG 123
302	003	V2173608025	BOLT , HEX/S	M8X25	6			
302	005	14581212000	CLUTCH ASSY		1			
302	006	14581212100	DISK ASSY , CLUTCH		1	B		
302	007	14601212200	COVER , CLUTCH		1	C		
302	008	V5211008016	PIN , PARALLEL/B	8X16	3			
302	009	14941010501GB	FLYWHEEL SUB		1			
302	011	V2144610030	BOLT , HEX FINE	M10X30	2			
302	015	V2024612030	BOLT , HEX FINE	M12X30	9			
302	016	V4011600120	WASHER , SPRING	M12	9			
302	017	V2144612035	BOLT , HEX FINE	M12X35	1			
302	018	V2024610030	BOLT , HEX FINE	M10X30	4			

NOTE	

FIG 303 T300/T350NC	BRAKE PEDAL	P1	Year / Month 2008 / 12	

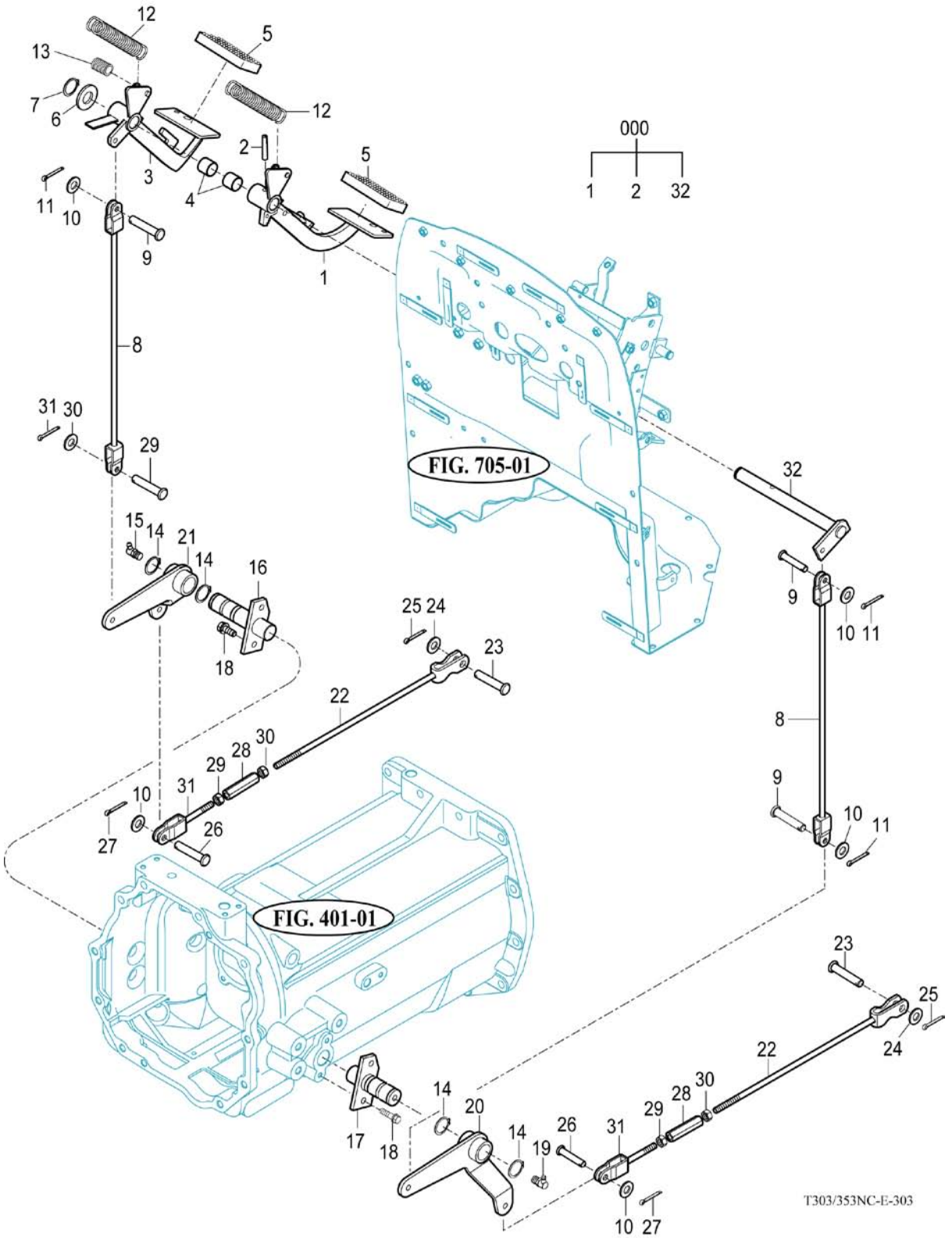

NOTE

FIG 303 T300NC / T350NC	BRAKE PEDAL	P1	Year / Month 2008 / 12	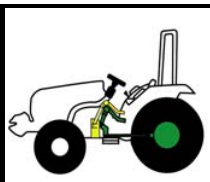

KEY NO.	PART NO.	DESCRIPSTION	SPEC.	QTY.	REPAIR	EFFECTIVE DATE	REMARKS
303 000	16703292000GB	PEDAL SET , LH		1			
303 001	16703292200	PEDAL COMP , LH BRAKE		1			
303 002	V5111008050	PIN , TAPER SPLIT	8X50	1			
303 003	14573292302GB	PEDAL COMP , RH BRAKE		1			
303 004	36707030080	BUSH , 20X23X20		2			
303 005	15241220010	PAD		2	C		
303 006	V4111600200	WASHER , PLAIN	M20	1			
303 007	V7041400200	C-RING , SHAFT	20	1			
303 008	16703292501GB	ROD COMP , HOOK 504		2			
303 009	14322420010	PIN		4			
303 010	V4111600080	WASHER , PLAIN	M8	6			
303 011	V5001925020	PIN , SPLIT	2.5X20	4			
303 012	14041200080	RETURN SPRING , CLUTCH		2			
303 013	15601320011	TUBE , CORRUGATE 1050		2			
303 014	V7041400250	C-RING , SHAFT	25	4			
303 015	V7631500000	NIPPLE , GREASE/B-PT	B-PT1/8	1			
303 016	14573283101	PIN COMP , 87		1			
303 017	14573283101	PIN COMP , 87		1			
303 018	V2173608020	BOLT , HEX/S	M8X20	4			
303 019	V7641500000	NIPPLE , GREASE/C-PT	C-PT1/8	1			
303 020	16703283301GB	ARM COMP , LH BRAKE		1			
303 021	16703283401GB	ARM COMP , RH BRAKE		1			
303 022	16703282302	ROD COMP , HOOK 644		2			
303 023	14723280030	PIN ,10X30		2			
303 024	V4111600100	WASHER , PLAIN	M10	2			
303 025	V5001930020	PIN , SPLIT	3X20	2			
303 026	14043120060	PIN , YOKE		2			
303 027	V5001920020	PIN , SPLIT	2X20	2			
303 028	16601220020	TURNBUCKLE , M8 L60		2			
303 029	V3043600080	NUT , HEX/2	M8	2			
303 030	15601320073	NUT , HEX LH		4			
303 031	14573282200	ROD COMP , FORK 100		2			
303 032	14573292100	ARM , BRAKE		1			

NOTE	

FIG 304 T300/T350NC	BRAKE	P1	Year / Month 2008 / 12	

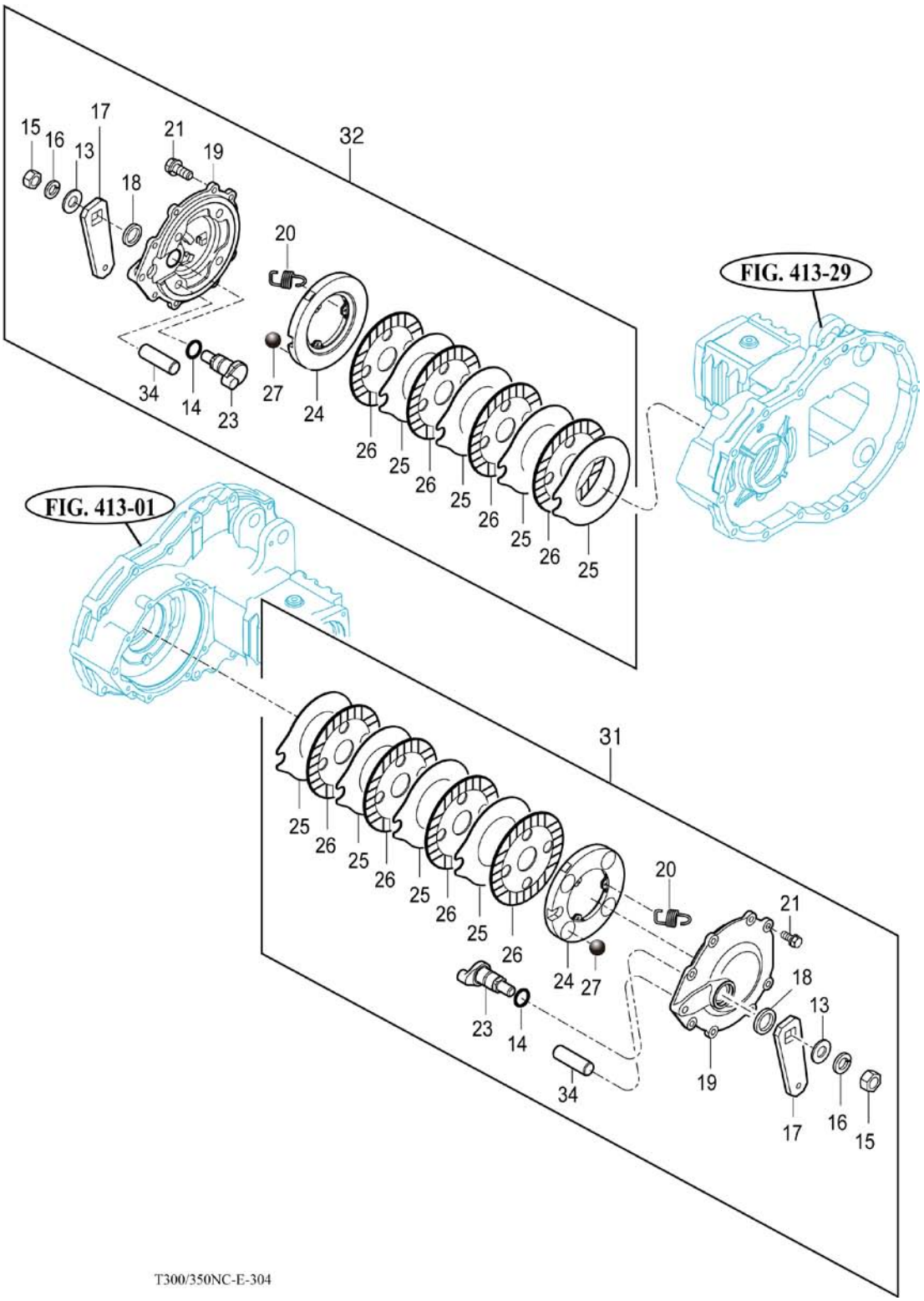

NOTE	

FIG 304 T300NC / T350NC	BRAKE	P1	Year / Month 2008 / 12	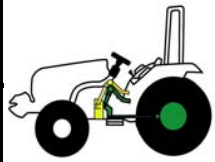

KEY NO.		PART NO.	DESCRIPSTION	SPEC.	QTY.	REPAIR	EFFECTIVE DATE	REMARKS
304	013	V4111600160	WASHER , PLAIN		2			
304	014	V7201024021	O RING , P		2			
304	015	V3343600160	NUT , HEX FINE/2		2			
304	016	V4011600160	WASHER , SPRING	M16	2			
304	017	16703270090	ARM , BRAKE		2			USM
304	018	V7441253506	SEAL , OIL/D	D25356	2			
304	019	16703102011	COVER , LH BRAKE		1			
304	020	16703272030	SPRING , RETURN		6			
304	021	V2173608020	BOLT , HEX/S	M8X20	16			
304	023	16703270011	CAM		4			
304	024	16703270021	METAL , RH BRAKE		1			
304	025	14443272021	PLATE , SEPARATE		8			
304	026	15603102011	PLATE COMP , DISK		8			
304	027	V6802000019	BALL , STEEL	19/32	8			
304	028	16703270040	METAL , LH BRAKE		1			
304	029	16703102020	COVER , RH BRAKE		1			
304	031	16703102001	DISK ASSY , LH BRAKE		1			USM
304	032	16703102101	DISK ASSY , RH BRAKE		1			USM
304	034	16703270030	PIN, TORQUE		2			

NOTE	

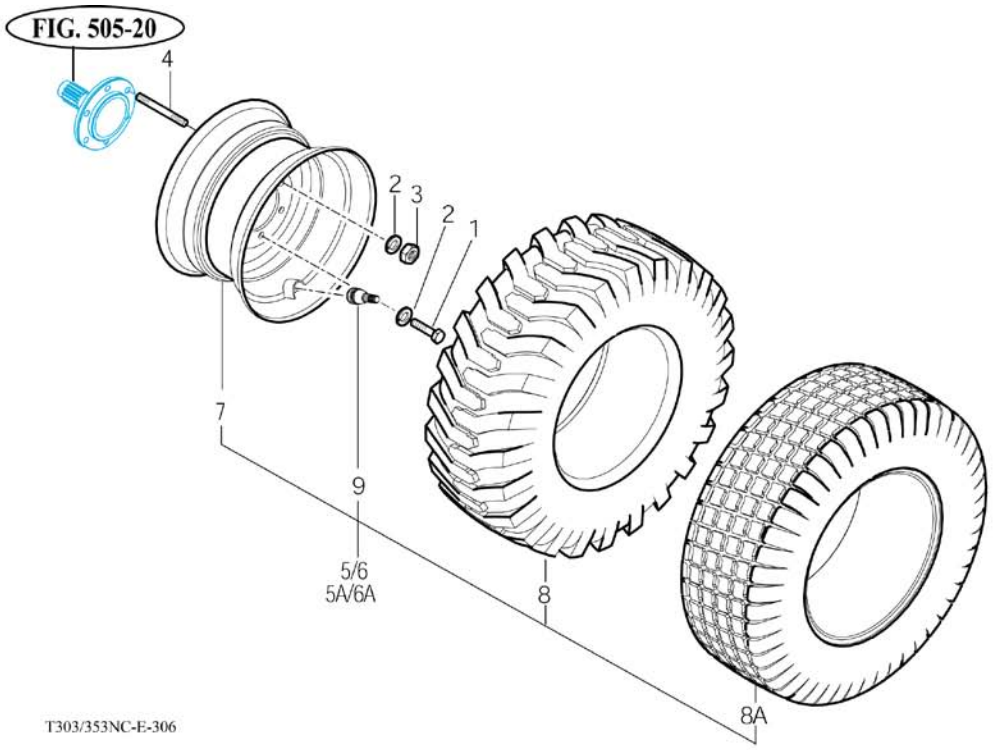
FIG. 505-20
4
2
3
2
1
7
9
5/6
5A/6A
8
8A
T303/353NC-E-306

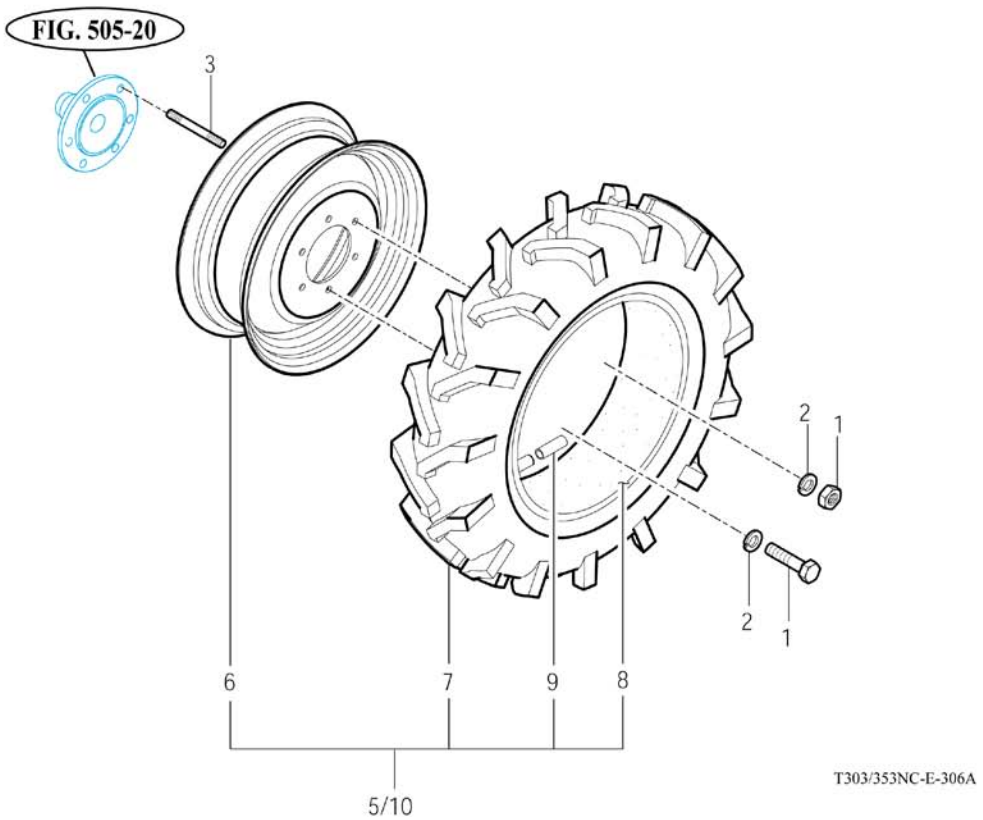
FIG. 505-20
3
2
1
2
1
6
7
9
8
5/10
T303/353NC-E-306A

NOTE

FIG 306 T300NC / T350NC			FRONT WHEEL MOUNTING			P1	Year / Month 2008 / 12	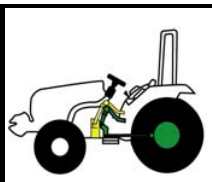
KEY NO.		PART NO.	DESCRIPSTION	SPEC.	QTY.	REPAIR	EFFECTIVE DATE	REMARKS
306	001	V2014616030	BOLT , HEX	M16X30	8			
306	002	V4011600160	WASHER , SPRING	M16	12			
306	003	V3043600160	NUT , HEX/2	M16	4			
306	004	15603200010	BOLT ,STUD	M16X30	4			
306	005	13534172000	TIRE ASSY , LH		1			R4
306	005A	13524172000	TIRE ASSY , LH		1			R3
306	006	13534172100	TIRE ASSY , RH		1			R4
306	006A	13524172100	TIRE ASSY , RH		1			R3
306	007	14583172200MS	RIM , 15x8J R3,R4		2	B		
306	008	14585172110	TIRE , 27/1050x15 R4		2	B		R4
306	008A	14583172110	TIRE, 27/1050LLx15 R3		2	B		R3
306	009	13154179000	VALVE SUB , TIRE		2			
306A	001	V2014616030	BOLT , HEX	M16X30	8			
306A	002	V4011600160	WASHER , SPRING	M16	12			
306A	003	15603200010	BOLT , STUD	M16X30	4			
306A	004	V3043600160	NUT , HEX/2	M16	4			
306A	005	14474172000	TIRE ASSY , LH FR		1			
306A	006	14574172201MS	RIM , 5.5F-16		2			
306A	007	14474172100	TIRE , 7-16		2	B		
306A	008	14474170010	TUBE , 7-16		2	B		
306A	009	V9993000010	CAP , VALVE/TIRE	A Type	2			
306A	010	14474172300	TIRE ASSY , RH FR		1			

NOTE	

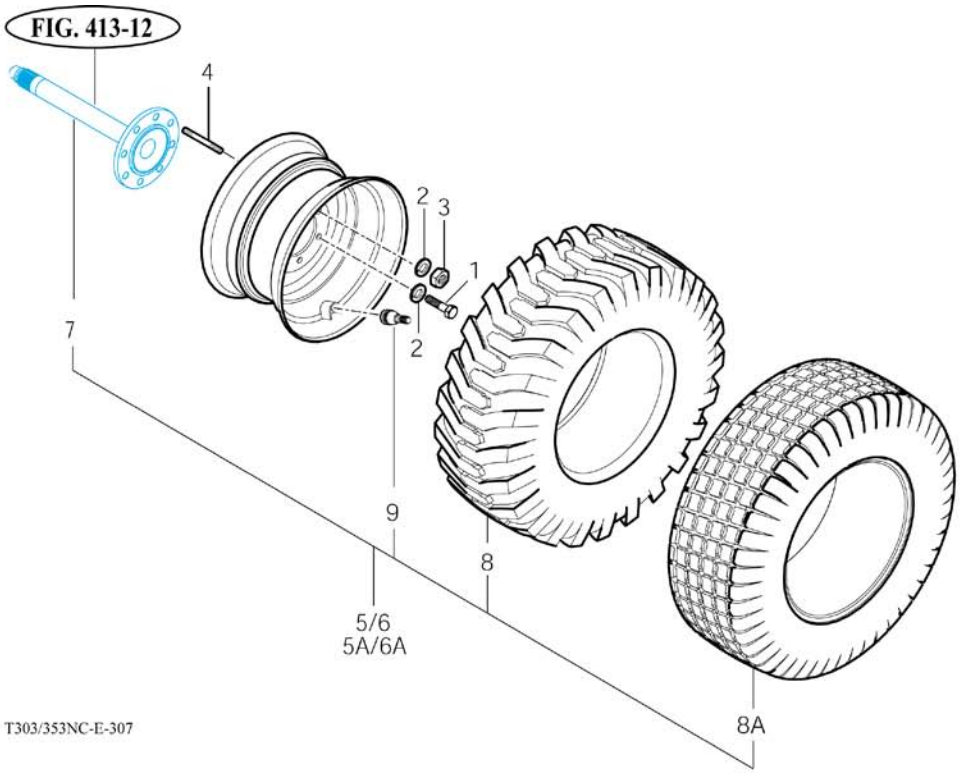
FIG. 413-12
4
2
3
1
2
7
9
8
5/6
5A/6A
8A
T303/353NC-E-307

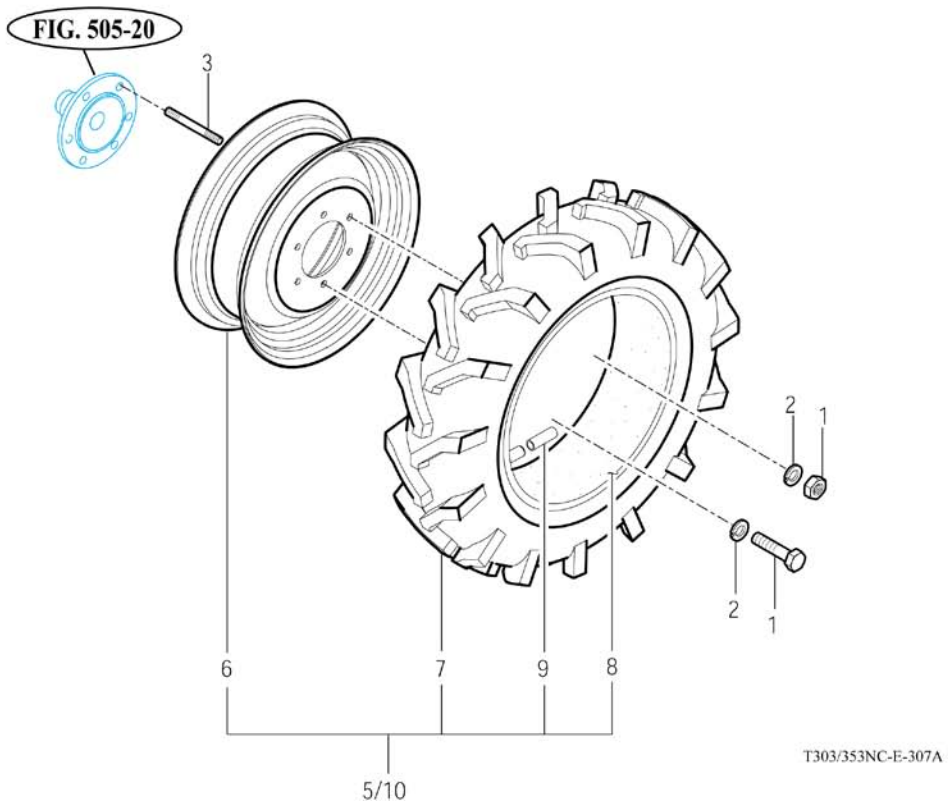
FIG. 505-20
3
2
1
2
1
6
7
9
8
5/10
T303/353NC-E-307A

NOTE

FIG 307 T300NC / T350NC	REAR WHEEL MOUNTING	P1	Year / Month 2008 / 12	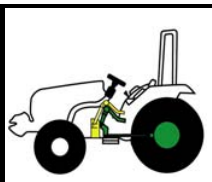

KEY NO.		PART NO.	DESCRIPSTION	SPEC.	QTY.	REPAIR	EFFECTIVE DATE	REMARKS
307	001	V2014616030	BOLT , HEX	M16X30	8			
307	002	V4011600160	WASHER , SPRING	M16	12			
307	003	V3043600160	NUT , HEX/2	M16	4			
307	004	15603200010	BOLT ,STUD	M16X30	4			
307	005	13533312100	TIRE ASSY , LH		1			R4
307	005A	13523312100	TIRE ASSY , LH		1			R3
307	006	13533312200	TIRE ASSY , RH		1			R4
307	006A	13523312200	TIRE ASSY , RH		1			R3
307	007	14584172201MS	RIM , 15x8J R3,R4		2	B		
307	008	14586172110	TIRE , 27/1050x15 R4		2	B		R4
307	008A	14584172110	TIRE, 41/1400x20 R3		2	B		R3
307	009	13153409000	VALVE SUB , TIRE		2			
307A	001	V2014616030	BOLT , HEX	M16X30	8			
307A	002	V4011600160	WASHER , SPRING	M16	12			
307A	003	15603200010	BOLT , STUD	M16X30	4			
307A	004	V3043600160	NUT , HEX/2	M16	4			
307A	005	14474172000	TIRE ASSY , LH FR		1			
307A	006	14574172201MS	RIM , 5.5F-16		2			
307A	007	14474172100	TIRE , 7-16		2	B		
307A	008	14474170010	TUBE , 7-16		2	B		
307A	009	V9993000010	CAP , VALVE/TIRE	A Type	2			
307A	010	14474172300	TIRE ASSY , RH FR		1			

NOTE	

FIG 308 T300/T350NC	STEERING WHEEL	P1	Year / Month 2008 / 12	

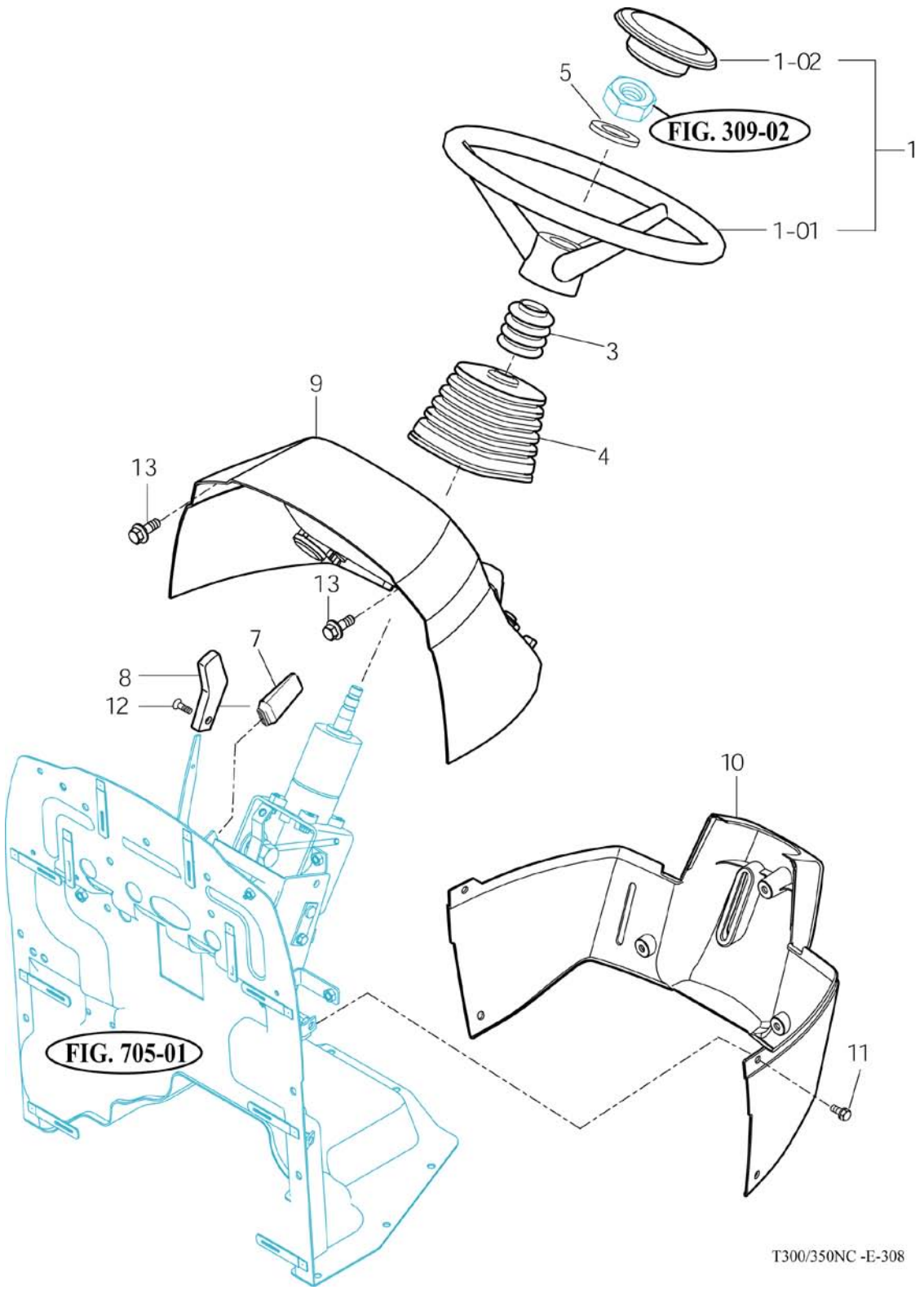

NOTE	

FIG 308 T300NC / T350NC		STEERING WHEEL			P1	Year / Month 2008 / 12	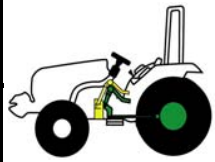
KEY NO.		***PART NO.***	***DESCRIPSTION***	***SPEC.***	***QTY.***	***REPAIR***	***EFFECTIVE DATE***	***REMARKS***
308	001	14724012002	WHEEL ASSY , STEERING		1			
308	00101	14724012100	WHEEL , STEERING		1			
308	00102	16994012020	COVER , STEERING		1			
308	003	16994011990	BOOT , STEERING		1		2009.01.23~	
308	004	14724010052	BOOT , TILT		1			
308	005	V4011600160	WASHER , SPRING	M16	1			
308	007	14322420040	CLIP		1			
308	008	15605110054	GRIP THROTTLE		1			
308	009	13026031010	COVER , UPR DASHPANEL		1			
308	010	14726031022	COVER , LOW DASHPANEL		1			
308	011	V2163808020	BOLT , HEX/P	M8X20	7			
308	012	V1122605012	SCREW , C/R FLAT		1			
308	013	V2113606012	BOLT , HEX /S	M6X12	2			
NOTE								

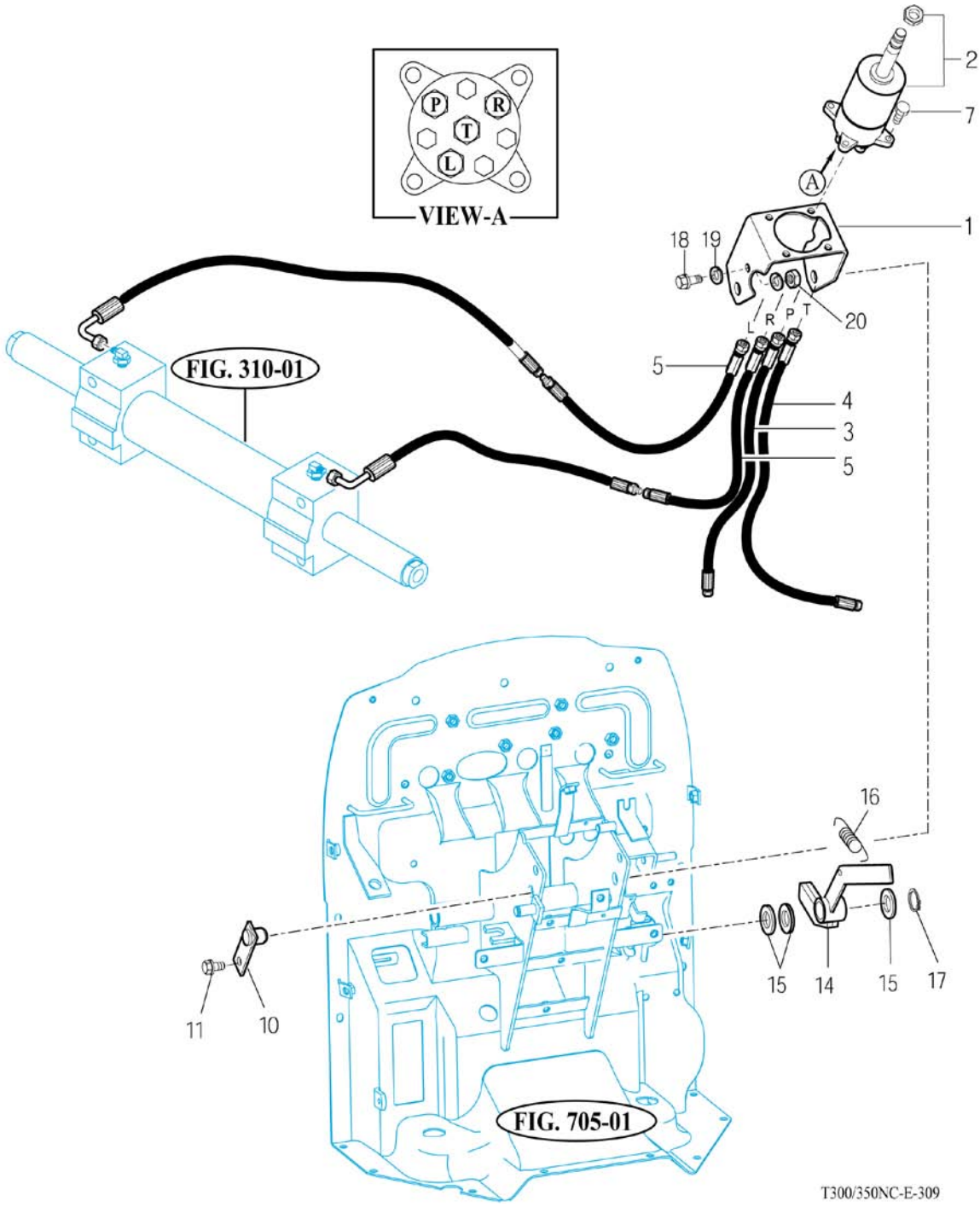
VIEW-A
P
R
T
L
A
2
7
1
18
19
20
L
R
P
T
5
4
3
5
FIG. 310-01
16
15
14
15
17
11
10
FIG. 705-01
T300/350NC-E-309

NOTE

FIG 309 T300NC / T350NC	STEERING VALVE & TILT	P1	Year / Month 2008 / 12	

KEY NO.	PART NO.	DESCRIPSTION	SPEC.	QTY.	REPAIR	EFFECTIVE DATE	REMARKS
309 001	14524043212GB	BRACKET , STEERING		1			
309 002	14524054001	VALVE UNIT,STEERING		1	C		
309 003	14945103401	HOSE ASSY , HYD 980		1	C		
309 004	16704052201	HOSE ASSY , HYD 1150		1	C		
309 005	14944052300	HOSE ASSY , HYD 1320		2	C		
309 007	V2183608020	BOLT , HEX/SP	M8X20	4			
309 010	16754042100GB	PIN COMP , LH 16X21		2			
309 011	V2173608016	BOLT , HEX/S	M8X16	2			
309 014	16703293303GB	LEVER COMP , PARKING		1			
309 015	V4111600160	WASHER , PLAIN	M16	3			
309 016	14321200040	SPRING , TENSION 31		1			
309 017	V7041400160	C-RING , SHAFT	16	1			
309 018	V2014612030	BOLT , HEX	M12X30	1			
309 019	V4011600120	WASHER , SPRING	M12	2			
309 020	V3043600120	NUT , HEX/2	M12	1			

NOTE	

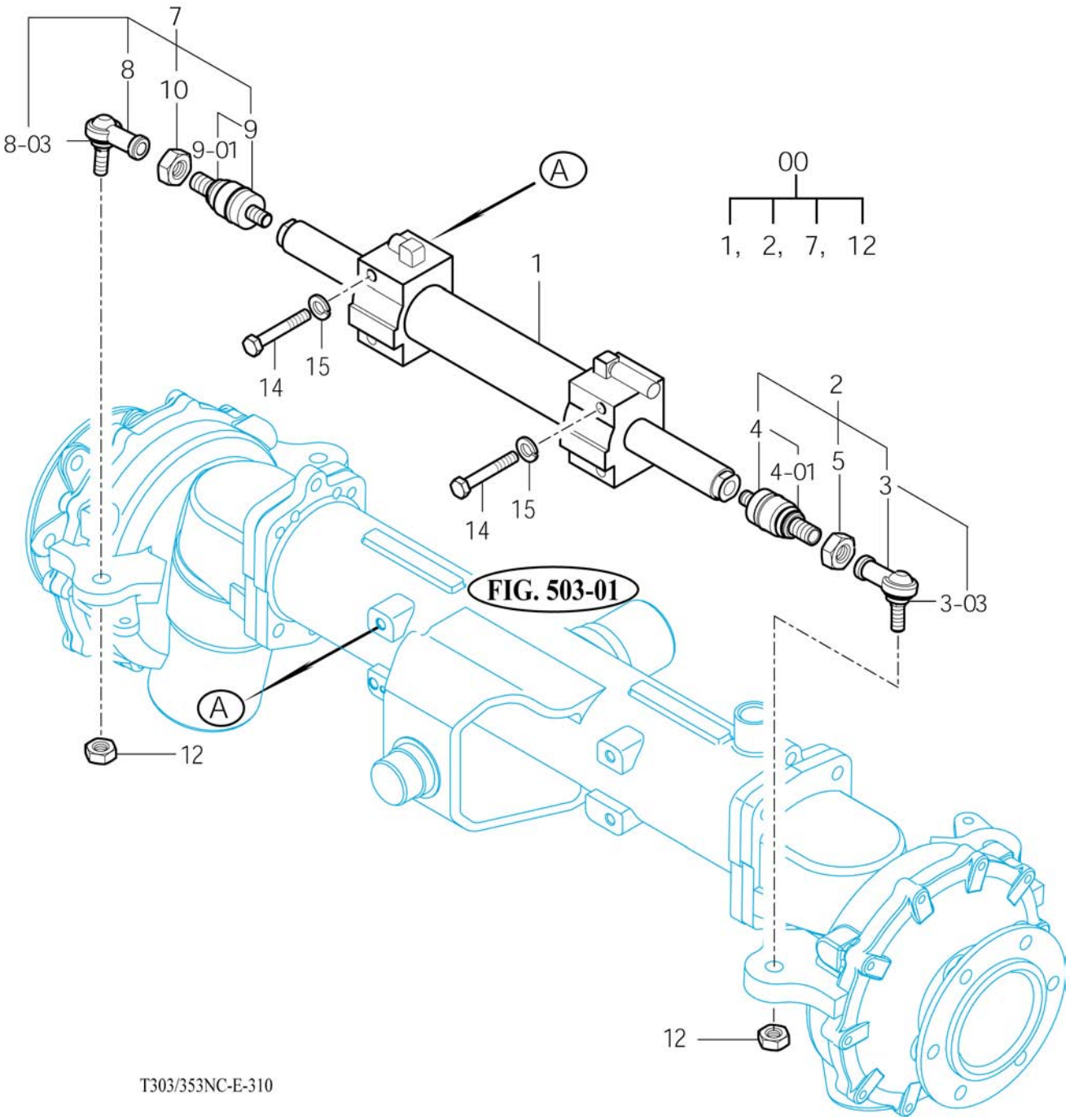
7
8
10
9
8-03
9-01
A
00
1, 2, 7, 12
1
14
15
2
4
4-01
5
3
3-03
14
15
FIG. 503-01
A
12
12
T303/353NC-E-310

NOTE	

FIG 310 T300NC / T350NC	STEERING CYLINDER	P1	Year / Month 2008 / 12	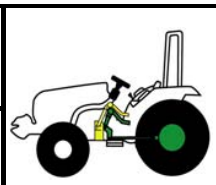

KEY NO.	PART NO.	DESCRIPSTION	SPEC.	QTY.	REPAIR	EFFECTIVE DATE	REMARKS
310 000	13014055000	CYLINDER ASSY		1			
310 001	14944053000GB	.CYLINDER COMP		1	C		
310 002	14884074101	.JOINT SET , LH BALL		1	C		
310 003	16704363201	..JOINT ASSY , LH BALL		1	C		
310 00303	16604362230	...COVER . DUST		1			
310 004	16704074300	..JOINT , BALL		1	C		
310 00401	15264074341	...COVER , DUST		1	C		
310 005	V3343600160	..NUT , HEX FINE/2	M16	1	C		
310 007	14884074201	.JOINT SET , RH BALL		1	C		
310 008	16704364201	..JOINT ASSY , RH BALL		1	C		
310 00803	16604362230	...COVER . DUST		1			
310 009	16704074300	..JOINT , BALL		1	C		
310 00901	15264074341	...COVER , DUST		1	C		
310 010	V3343600160	..NUT , HEX FINE/2	M16	1	C		
310 012	17682600140	.NUT , NYLON		2			
310 014	V2034612090	BOLT , HEX FINE	M12X90	4			
310 015	V4011600120	WASHER , SPRING	M12	4			

NOTE	

FIG 401 T300/350NC	TRANSMISSION FRONT CASE	P1	Year / Month 2008 / 12	

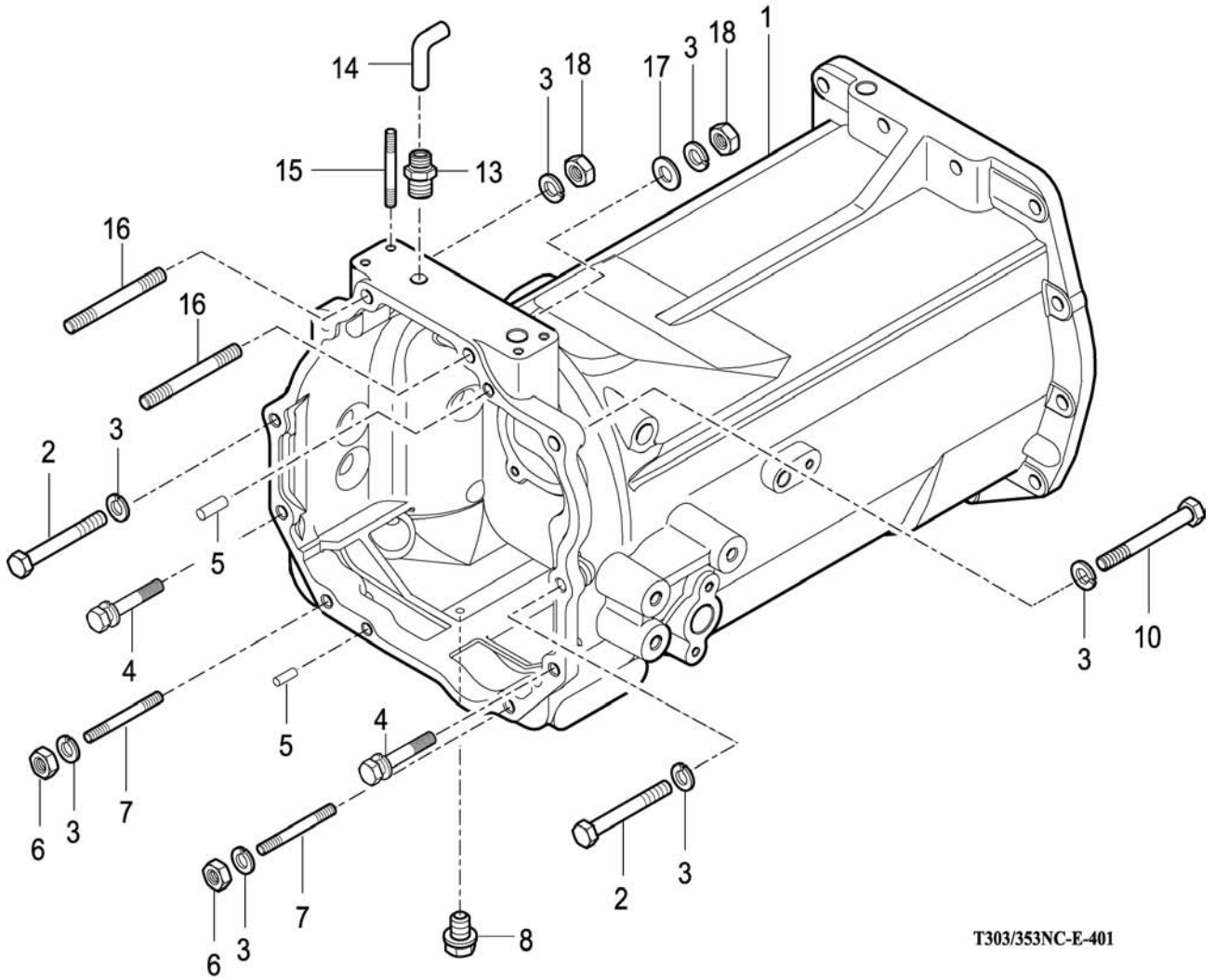

NOTE

FIG 401 T300NC / T350NC			TRANSMISSION FRONT CASE			P1	Year / Month 2008 / 12	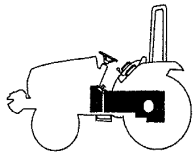
KEY NO.		***PART NO.***	***DESCRIPSTION***	***SPEC.***	***QTY.***	***REPAIR***	***EFFECTIVE DATE***	***REMARKS***
401	001	16702100014M	CASE , FR TRANSMISSION		1			
401	002	V2013612060	BOLT , HEX	M12X60	2			
401	003	V4011600120	WASHER , SPRING	M12	8			
401	004	V2173612030	BOLT , HEX/S	M12X30	2			
401	005	V5201010022	PIN , PARALLEL/A	10X22	2			
401	006	V3043600120	NUT , HEX/2	M12	2			
401	007	V2513412032	BOLT , STUD/2	M12X32	2			
401	008	13267060022	PLUG , DRAIN		1			
401	010	V2013612045	BOLT , HEX	M12X45	2			
401	012	V2013612080	BOLT , HEX	M12X80	1			
401	013	13012011110	CONNECTOR , PT3/8		1			
401	014	15134080020	HOSE , OIL		1			
401	015	V2514410025	BOLT , STUD/2	M10X25	2			
401	016	14722010040	BOLT , STUD	M12X85	1			
401	017	V4111600120	WASHER-PLAIN		1			
401	018	V3343600120	NUT , HEX/2		1			

NOTE	

FIG 402 T300/350NC	INPUT METAL	P1	Year / Month 2008 / 12	

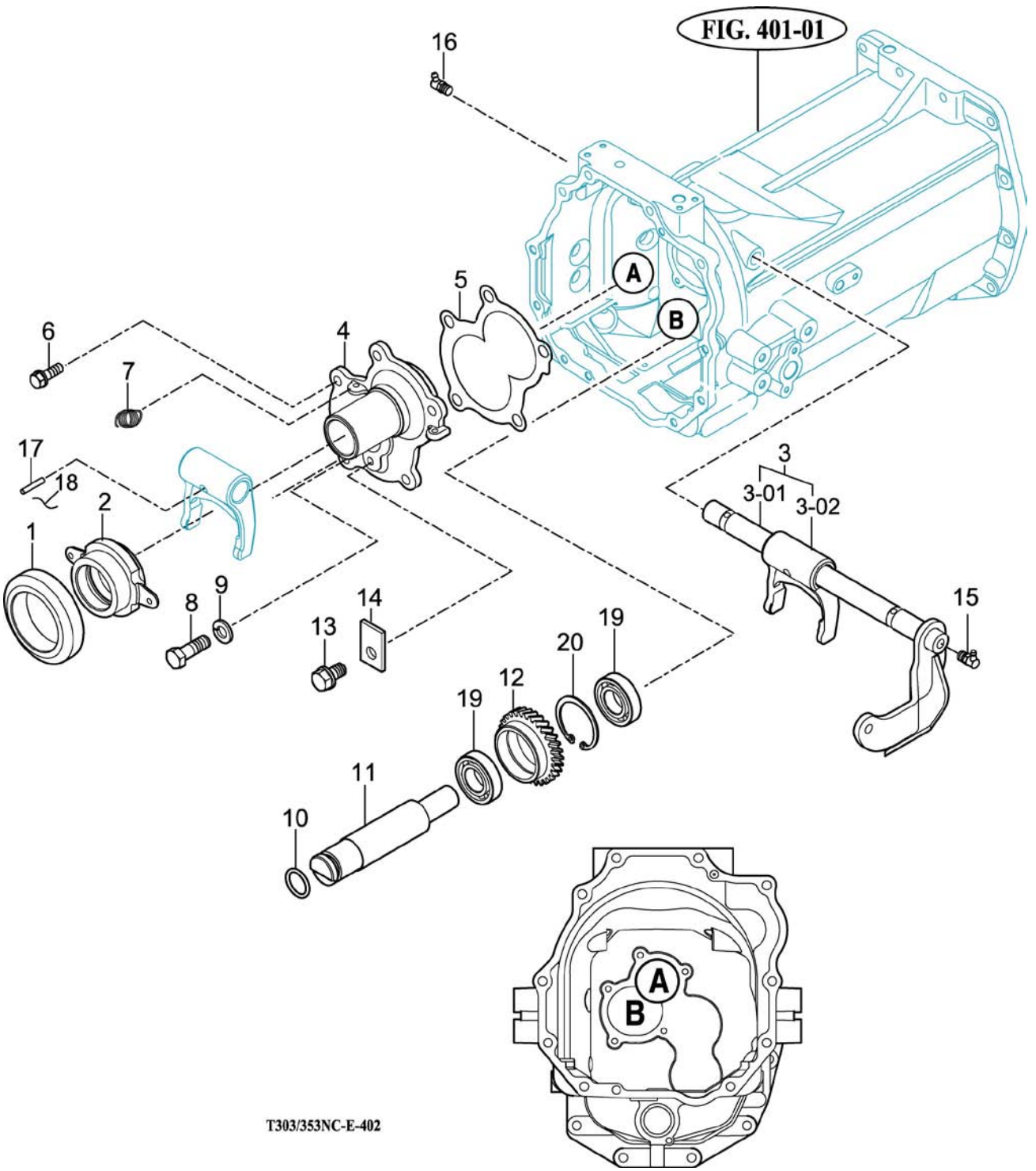

NOTE	

FIG 402 T300NC / T350NC			INPUT METAL			P1	Year / Month 2008 / 12	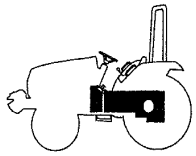
KEY NO.		***PART NO.***	***DESCRIPSTION***	***SPEC.***	***QTY.***	***REPAIR***	***EFFECTIVE DATE***	***REMARKS***
402	001	14601210050	BEARING , CLUTCH RELEASE		1	C		
402	002	16701210022M	SLEEVE		1			
402	003	16701302004	SHAFT SET , CLUTCH RELEASE		1			
402	00301	16701302104	BAR		1			
402	00302	14571302010	FORK , RELEASE		1			
402	004	16701210013M	METAL , INPUT		1			
402	005	16701031060	PACKING , INPUT METAL		1	B		
402	006	14572100030	BOLT , SEAL M8X20		4			
402	007	16701200040	SPRING , TENSION 25		2			
402	008	14151210090	BOLT , REAMER		1			
402	009	V4011600080	WASHER , SPRING	M8	1			
402	010	V7201035022	O-RING , P	P22A	1			
402	011	16702121012	SHAFT		1			
402	012	16702121023	GEAR, HELICAL 22T		1			
402	013	V2173608012	BOLT , HEX/S	M8X12	1			
402	014	16702160090	PLATE		1			
402	015	V7641500000	NIPPLE , GREASE/C-PT	C-PT1/8	1			
402	016	V7611500000	NIPPLE , GREASE/A-PT	A-PT1/8	1			
402	017	16701300010	PIN , 08X36		1			
402	018	V5901012150	WIRE , STEEL	1.2X150	1			
402	019	V6041106004	BEARING , BALL/HL1	6004HL1	2			
402	020	V7051400420	C-RING , HOLE	42	1			

NOTE	

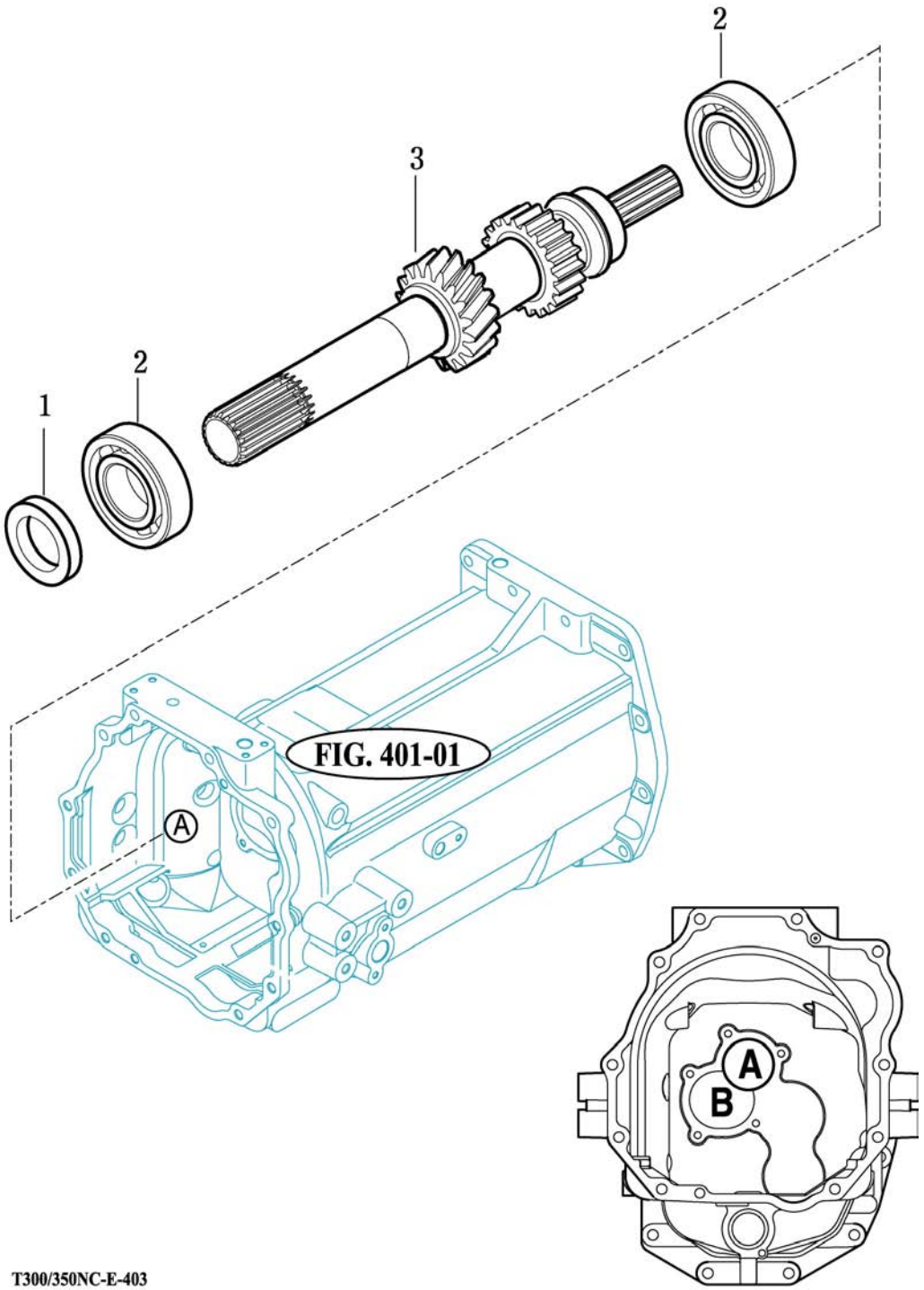

NOTE

FIG 403 T300NC / T350NC	INPUT GEAR	P1	Year / Month 2008 / 12	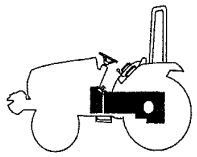

KEY NO.		PART NO.	DESCRIPSTION	SPEC.	QTY.	REPAIR	EFFECTIVE DATE	REMARKS
403	001	V7441304508	SEAL , OIL/D	D30458	1	B		
403	002	V6041106206	BEARING , BALL/HL1	6206HL1	2			
403	003	13212110130	GEAR , HELICAL 19T		1			

NOTE	

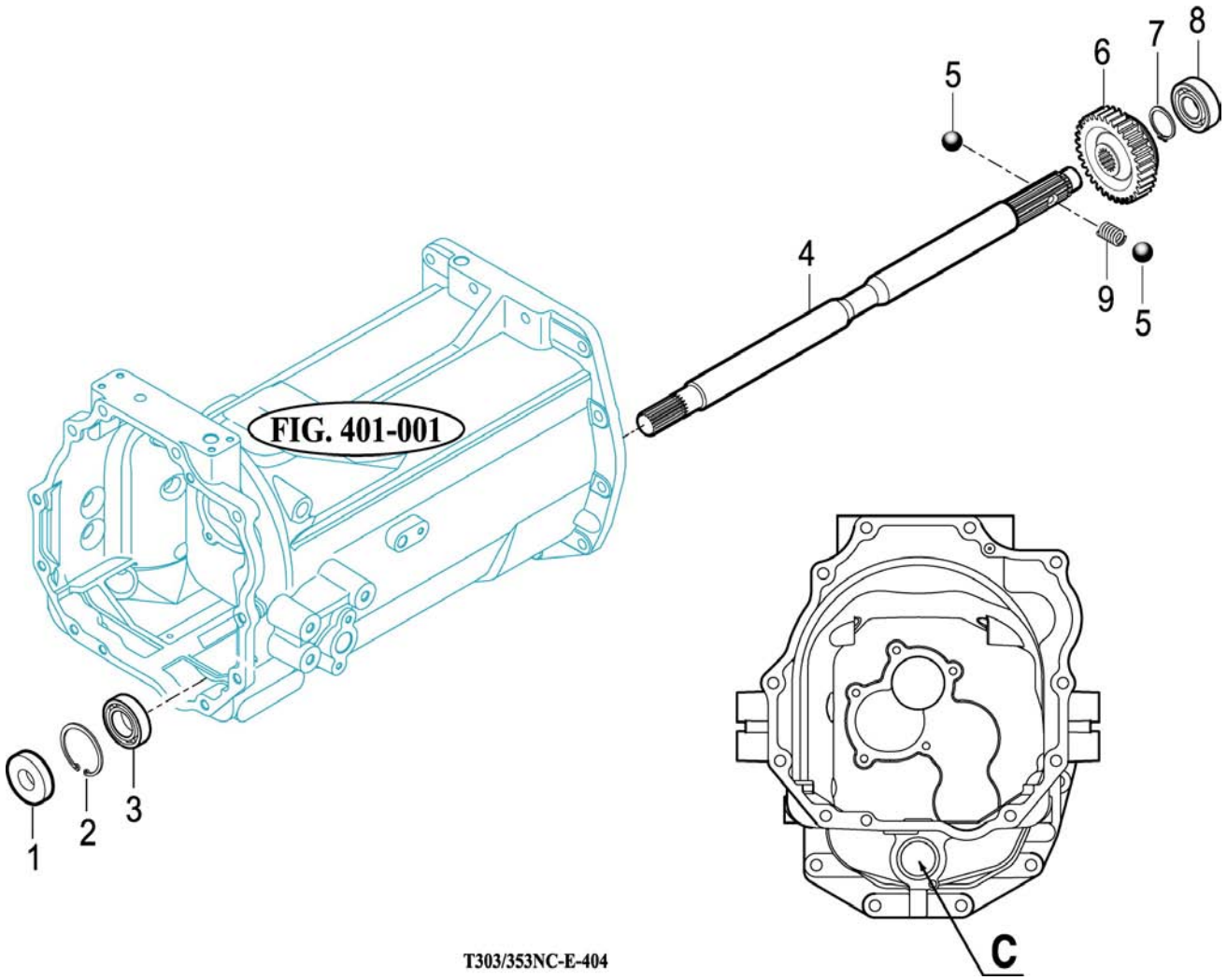

T303/353NC-E-404

NOTE	

FIG 404 T300NC / T350NC	4WD DRIVE GEAR	P1	Year / Month 2008 / 12	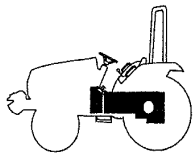

KEY NO.		PART NO.	DESCRIPSTION	SPEC.	QTY.	REPAIR	EFFECTIVE DATE	REMARKS
404	001	V7441254708	SEAL , OIL/D	D25478	1	B		
404	002	V7051400470	C-RING , HOLE	47	1			
404	003	V6001106005	BEARING , BALL	6005	1			
404	004	16702610042	SHAFT , 4WD DRIVE		1			
404	005	V6802000010	BALL , STEEL		2			
404	006	16702610023	4WD GEAR , SPUR 28T		1			
404	007	V7041400280	C-RING , SHAFT	28	1			
404	008	V6001106204	BEARING , BALL	6204	1			
404	009	13022250030	SPRING , SHIFTER		1			

NOTE	

FIG 405 T300/350NC	MAIN CHANGE GEARS & REVERSE GEARS	P1	Year / Month 2008 / 12	

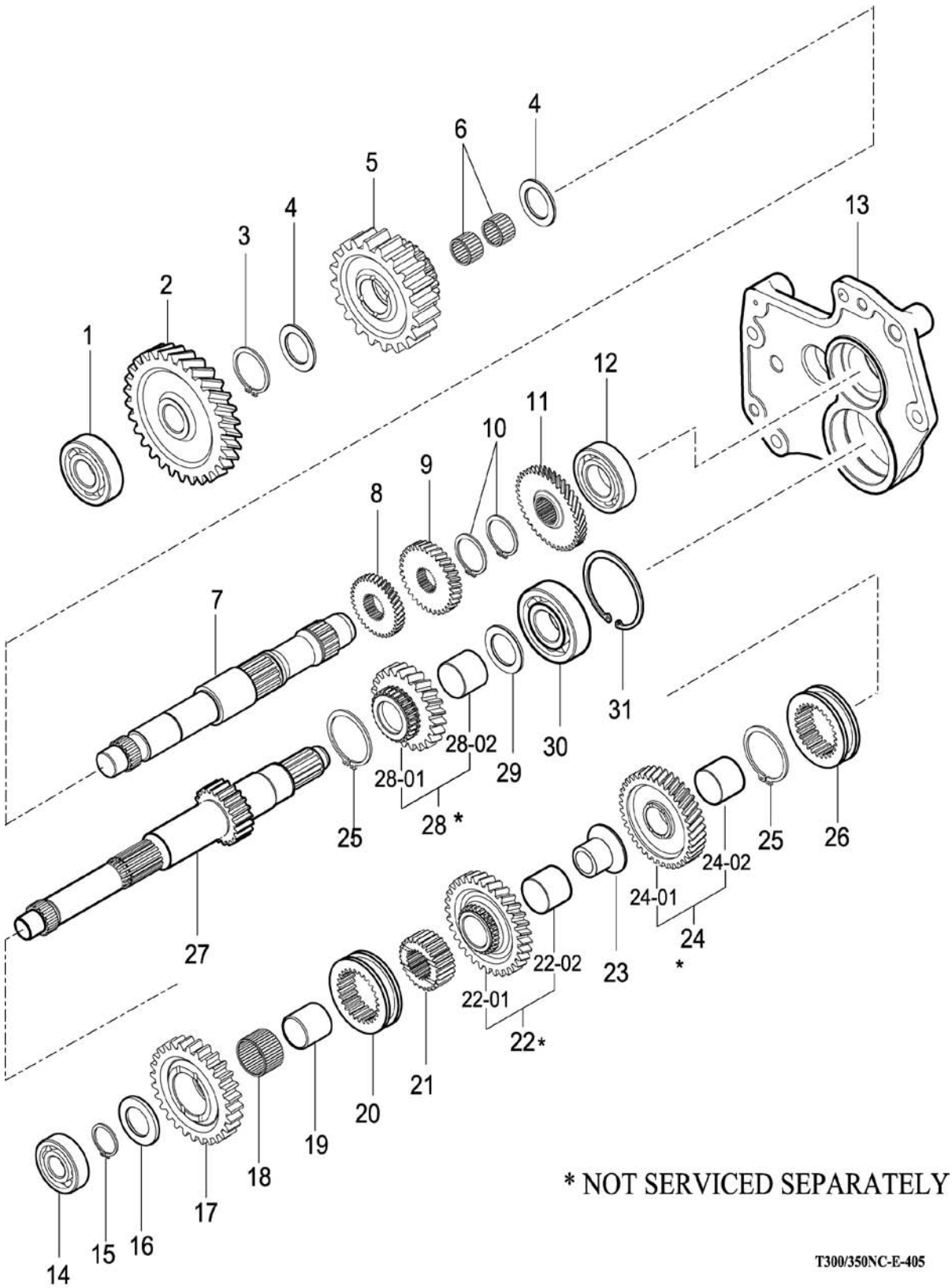

NOTE

FIG 405 T300NC / T350NC	MAIN CHANGE GEARS & REVERSE GEARS	P1	Year / Month 2008 / 12	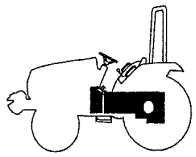

KEY NO.	PART NO.	DESCRIPSTION	SPEC.	QTY.	REPAIR	EFFECTIVE DATE	REMARKS
405 001	V6041106305	BEARING , BALL/HL1	6305HL1	1			
405 002	13212131020	GEAR , HELICAL 42T		1			
405 003	V7041400300	C-RING , SHAFT	30	1			
405 004	15642160041	WASHER , 30X46X3		2			
405 005	13212131031	GEAR , SPUR/41T/25T		1			
405 006	V6544303517	BEARING , NEEDLE.ROLLER	KT303517	2			
405 007	13212110011	SHAFT , FORWARD		1			
405 008	13212220050	GEAR , HELICAL 19T		1			
405 009	14572220060	GEAR , HELICAL 24T		1			
405 010	V7041400350	C-RING , SHAFT	35	2			
405 011	14572220020	GEAR , HELICAL 29T		1			
405 012	V6041106206	BEARING , BALL/HL1	6206HL1	1			
405 013	16702200201M	METAL , BEARING		1			
405 014	V6041106304	BEARING , BALL/HL1	6304HL1	1			
405 015	V7041400280	C-RING , SHAFT	28	1			
405 016	16702210021	WASHER , 28X46X05		1			
405 017	13212211040	GEAR , SPUR 34T		1			
405 018	V6544323723	BEARING , NEEDLE.ROLLER	KT323723	1			
405 019	15602080093	BUSH , 28X32X31		1			
405 020	15602080224	COUPLING , 51X72X18		2			
405 021	13212090020	HUB , 28X51X21		1			
405 022	13212211200	GEAR ASSY , HELICAL 38T		1			
405 02201	13212210070	GEAR , HELICAL 38T		1			
405 02202	16702211910	BUSH , 32X34X28		1			
405 023	16702210030	BUSH(28X46X31.5)		1			
405 024	16702211500	GEAR ASSY , HELICAL 32T		1			
405 02401	16702210150	GEAR , HELICAL 32T		1			
405 02402	16702211910	BUSH , 32X34X28		1			
405 025	V7041400500	C-RING , SHAFT	50	2			
405 026	15602080224	COUPLING , 51X72X18		1			
405 027	16702211011	SHAFT , MAIN SHIFTER		1			
405 028	16702211900	GEAR ASSY , HELICAL 28T		1			
405 02801	16702211020	GEAR , HELICAL 28T		1			
405 02802	16702211910	BUSH , 32X34X28		1			
405 029	15642160041	WASHER , 30X46X3		1			
405 030	V6001106306	BEARING , BALL	6306	1			
405 031	V7051400720	C-RING , HOLE	72	1			

NOTE	

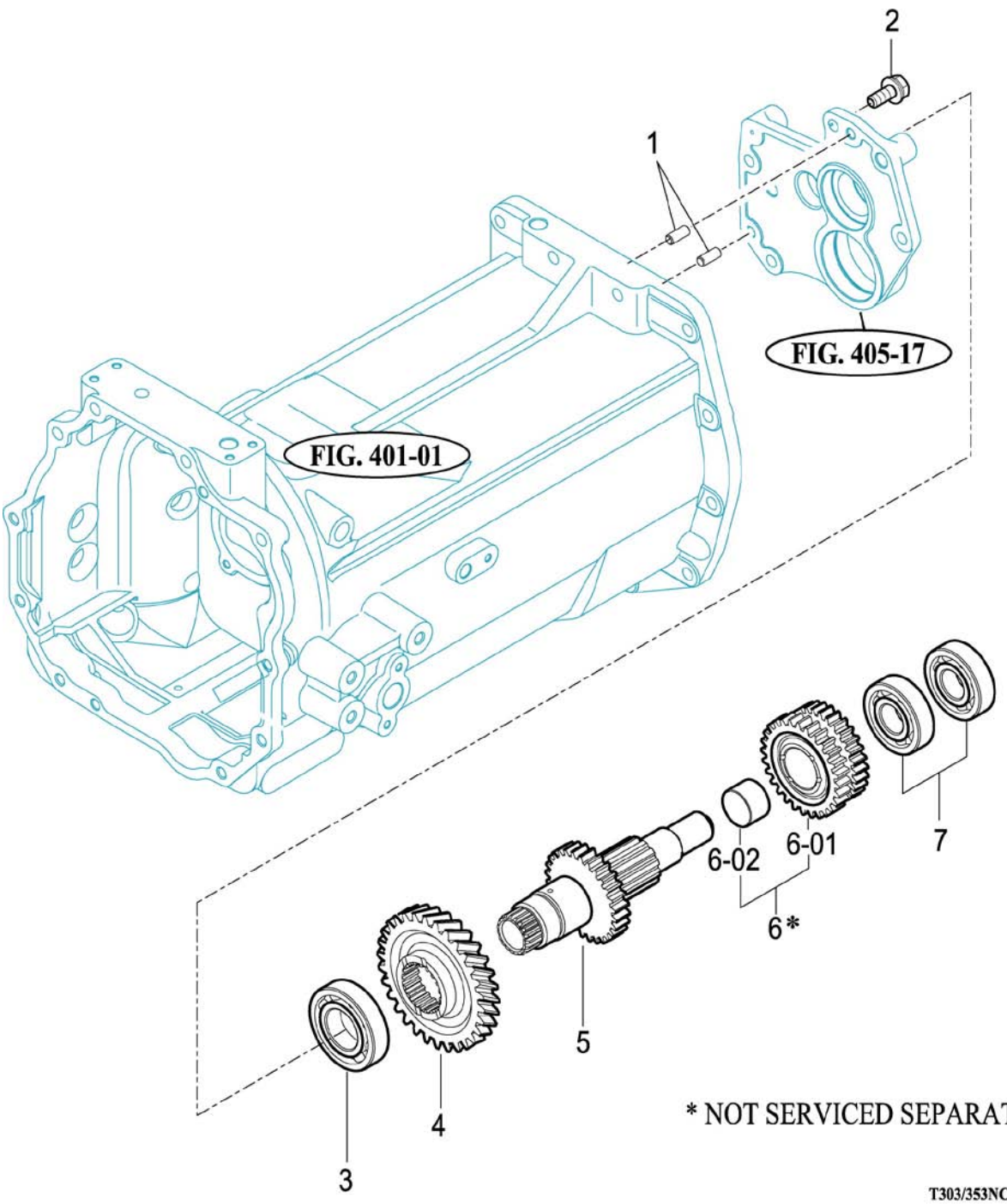
2
1
FIG. 405-17
FIG. 401-01
6-02
6-01
7
6*
5
4
3
* NOT SERVICED SEPARATELY
T303/353NC-E-406

NOTE

FIG 406 T300NC / T350NC	SUB CHANGE GEARS	P1	Year / Month 2008 / 12	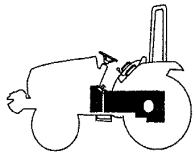

KEY NO.		PART NO.	DESCRIPSTION	SPEC.	QTY.	REPAIR	EFFECTIVE DATE	REMARKS
406	001	V5201010022	PIN , PARALLEL/A	10X22	2			
406	002	V2173612030	BOLT , HEX/S	M12X30	4			
406	003	V6001106207	BEARING , BALL	6207	1			
406	004	14572420021	GEAR , HELICAL 37T		1			
406	005	16702421010	GEAR , 24-11T		1			
406	006	16702611301	GEAR , SPUR 29-28T ASSY		1			
406	00601	16702611311	.GEAR , SPUR 29-28T		1			
406	00602	16702611320	.BUSH , 30X32X21		1			
406	007	V6001106305	BEARING , BALL		2			

NOTE	

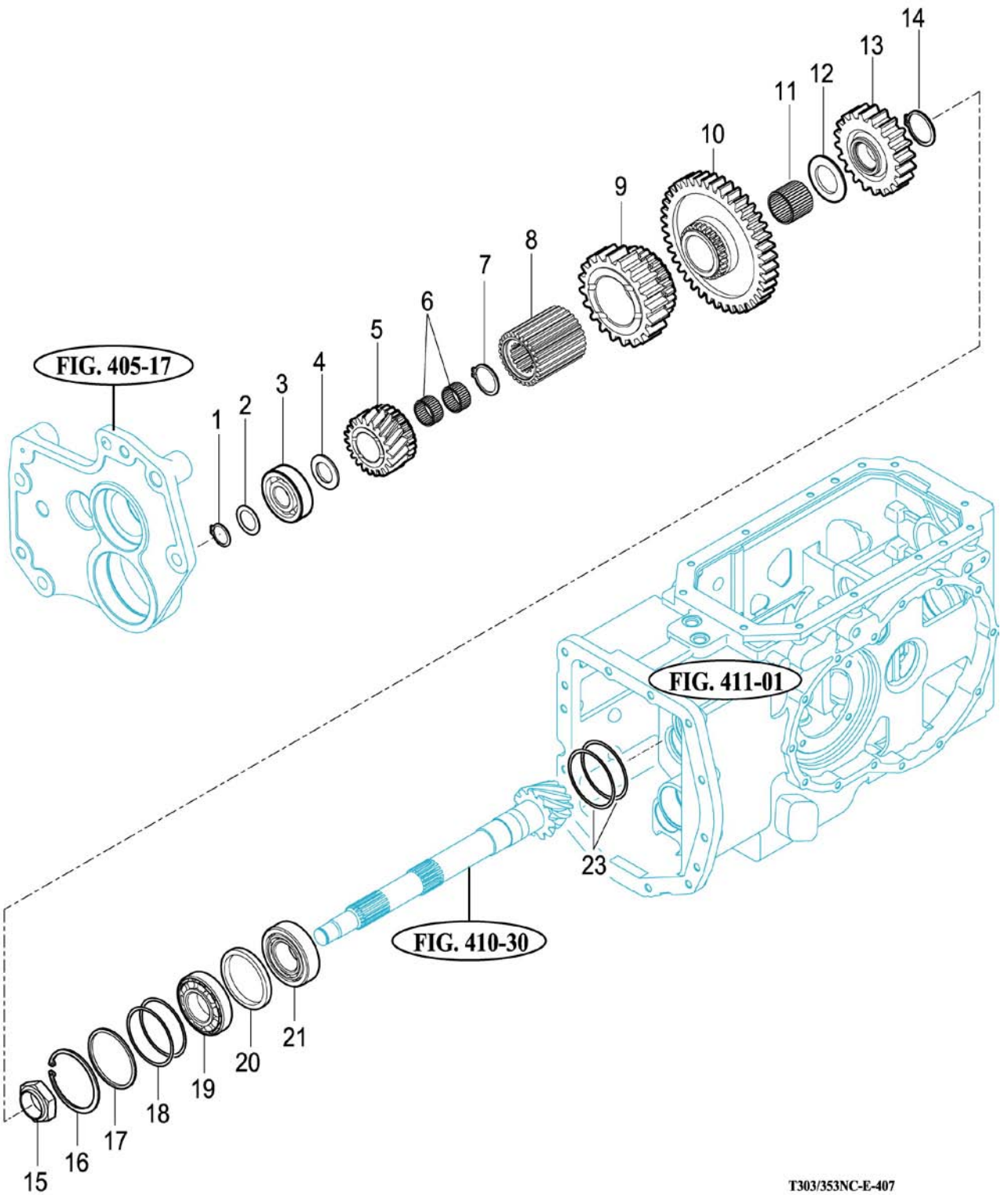
FIG. 405-17
FIG. 411-01
FIG. 410-30
1
2
3
4
5
6
7
8
9
10
11
12
13
14
15
16
17
18
19
20
21
23
T303/353NC-E-407

NOTE

FIG 407 T300NC / T350NC	PINION GEARS	P1	Year / Month 2008 / 12	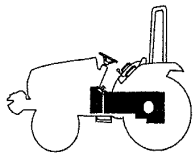

KEY NO.	PART NO.	DESCRIPSTION	SPEC.	QTY.	REPAIR	EFFECTIVE DATE	REMARKS
407 001	V7041400200	C-RING , SHAFT	20	1			
407 002	16702611030	WASHER , 20X30Xx1.0		1			
407 003	V6041106304	BEARING , BALL/HL1	6304HL1	1			
407 004	14602130030	WASHER , 20X34X3		1			
407 005	14572412300	GEAR COMP , HELICAL 14T		1			
407 006	V6544222613	BEARING , NEEDLE.ROLLER	KT222613	2			
407 007	V7041400280	C-RING , SHAFT	28	1			
407 008	16702410020	HUB , 28X51X59		1			
407 009	14572411022	GEAR , SPUR 29T		1			
407 010	14572411010	GEAR , SPUR 42T		1			
407 011	V6544283327	BEARING , NEEDLE.ROLLER	KT283327	1			
407 012	14572410010	WASHER , 28X46X3		1			
407 013	16702611011	GEAR , SPUR 25T		1			
407 014	V7041400300	C-RING , SHAFT	30	1			
407 015	16703020040	NUT , M33X1.5		1			
407 016	V7051400720	C-RING , HOLE	72	1			
407 017	16703180100	SHIM , P/3.0		1			
407 018	16703180110	SHIM , P/0.1		2			
407 019	V6341130207	BEARING , TAPER-ROLLER	30207J	1			
407 020	16703180130	SPACER , BEARING		1			
407 021	V6341132207	BEARING , TAPER-ROLLER	32207J	1			
407 023	16703180120	SHIM , P/0.2		2			

NOTE	

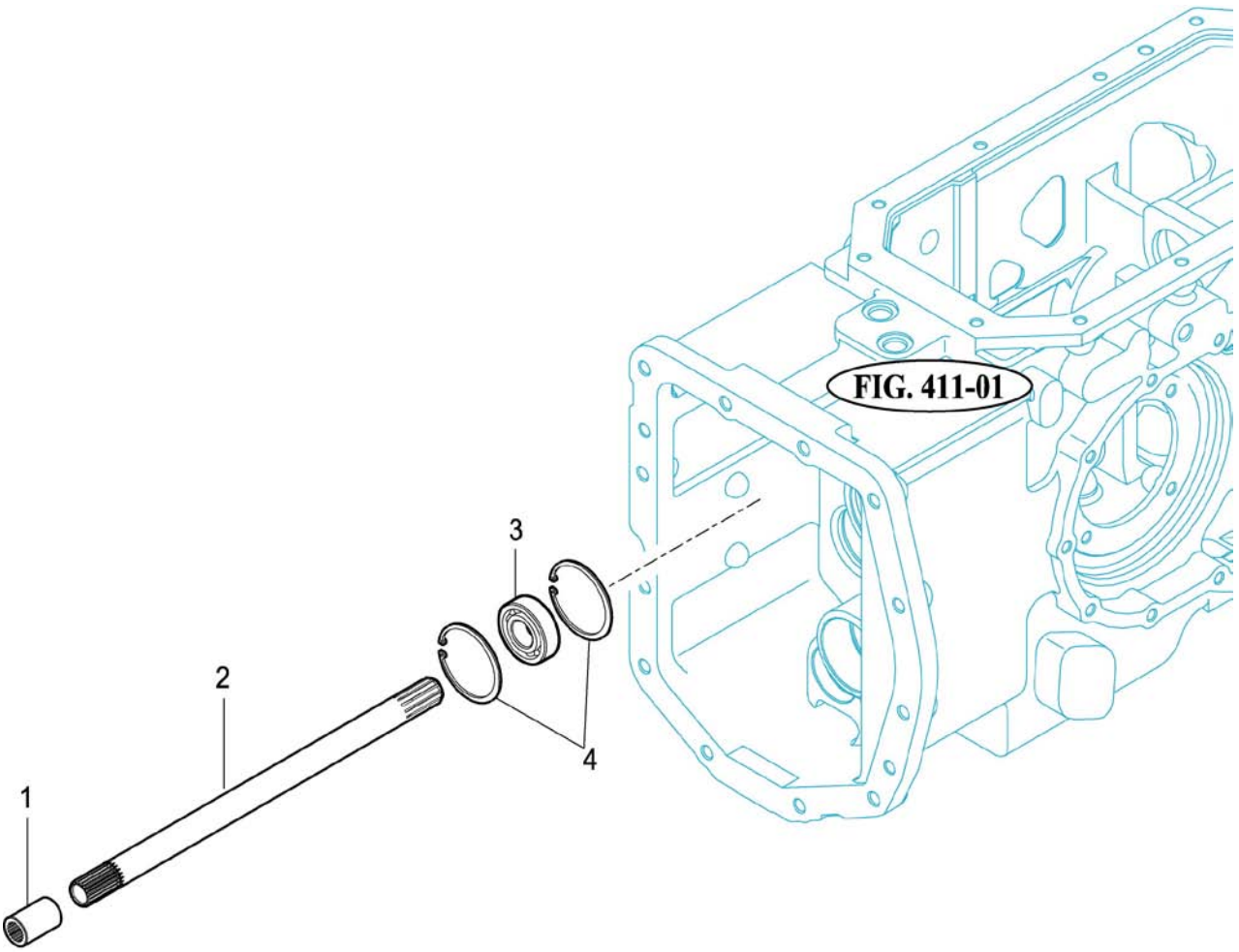

T300/350NC-E-408

NOTE

FIG 408 T300NC / T350NC	P.T.O DRIVE SHAFT	P1	Year / Month 2008 / 12	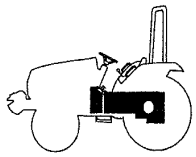

KEY NO.		PART NO.	DESCRIPSTION	SPEC.	QTY.	REPAIR	EFFECTIVE DATE	REMARKS
408	001	14211340190	COUPLING		1			
408	002	13212171041	SHAFT , MID		1	A		
408	003	V6001106204	BEARING , BALL	6204	1			
408	004	V7051400470	C-RING , HOLE	47	2			

NOTE	

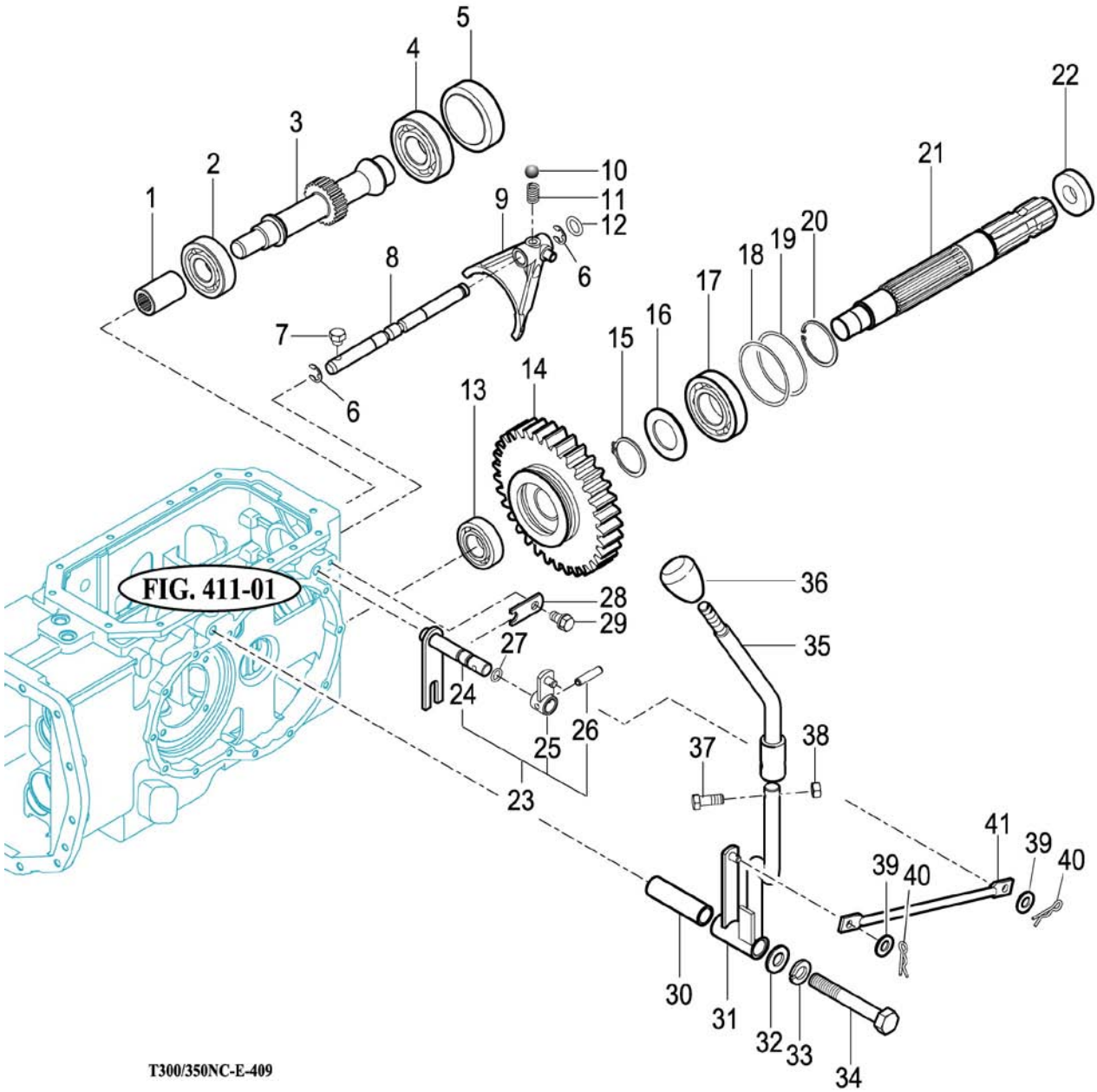
FIG. 411-01
1
2
3
4
5
6
7
8
9
10
11
12
13
14
15
16
17
18
19
20
21
22
23
24
25
26
27
28
29
30
31
32
33
34
35
36
37
38
39
40
41
T300/350NC-E-409

NOTE

FIG 409 T300NC / T350NC	P.T.O CHANGE GEARS	P1	Year / Month 2008 / 12	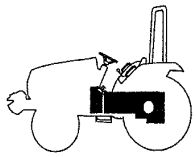

KEY NO.	PART NO.	DESCRIPTION	SPEC.	QTY.	REPAIR	EFFECTIVE DATE	REMARKS
409 001	14211340190	COUPLING		1			
409 002	V6001106305	BEARING , BALL	6305	1			
409 003	13212543530	GEAR , SPUR 11		1			
409 004	V6001106306	BEARING , BALL	6306	1			
409 005	14254330180	CAP , 72		1	C		
409 006	V7081400100	E-RING	10	2			
409 007	15602231610	BOLT , SET M8X16		1			
409 008	13212540020	STAY , PTO SHIFT		1			
409 009	16702540011M	FORK , PTO		1			
409 010	V6802000010	BALL , STEEL		1			
409 011	13022250030	SPRING , SHIFTER		1			
409 012	V7201024010	O-RING , P	P10A	1	B		
409 013	V6001106205	BEARING , BALL	6205	1			
409 014	13212543500	GEAR ,SPUR(PTO 54T)		1			
409 015	V7041400350	C-RING , SHAFT	35	1			
409 016	14443140041	COLLAR , 35X50X2		1			
409 017	V6001106207	BEARING , BALL	6207	1			
409 018	79642010080	SHIM , B		2			
409 019	16322730030	SHIM , 0.5		1			
409 020	V7051400720	C-RING , HOLE	72	1			
409 021	16703140011	SHAFT , PTO		1			
409 022	16322732000	SEAL ASSY , OIL		1	B		
409 023	16702555102	HOOK SET , RR PTO		1			
409 024	16702542102	HOOK COMP , RR PTO		1			
409 025	16702432201	ARM COMP , RANGE		1			
409 026	V5111006036	PIN , TAPER SPLIT	6X36	1			
409 027	V7201024012	O-RING , P	P12	1	B		
409 028	16702230371	PLATE		1			
409 029	V2173608016	BOLT , HEX/S	M8X16	1			
409 030	16702440070	HIB(13*17*61)		1			
409 031	16702552102	LEVER COMP , PTO/DOWN		1			
409 032	V4111600120	WASHER , PLAIN	M12	1			
409 033	V4011600140	WASHER , SPRING	M14	3			
409 034	V2013612085	BOLT , HEX	M12X85	1			
409 035	16702552201GB	LEVER COMP ,PTO(UP)		1			
409 036	15442190050	GRIP , LEVER 12		1			
409 037	V2013608035	BOLT , HEX	M12	1			
409 038	V3042600080	NUT	M8	1			
409 039	V5601600008	PIN , SNAP	8	2			
409 040	V4111600080	WASHER , PLAIN	M8	2			
409 041	16702553100	ROD , 236		1			

NOTE	

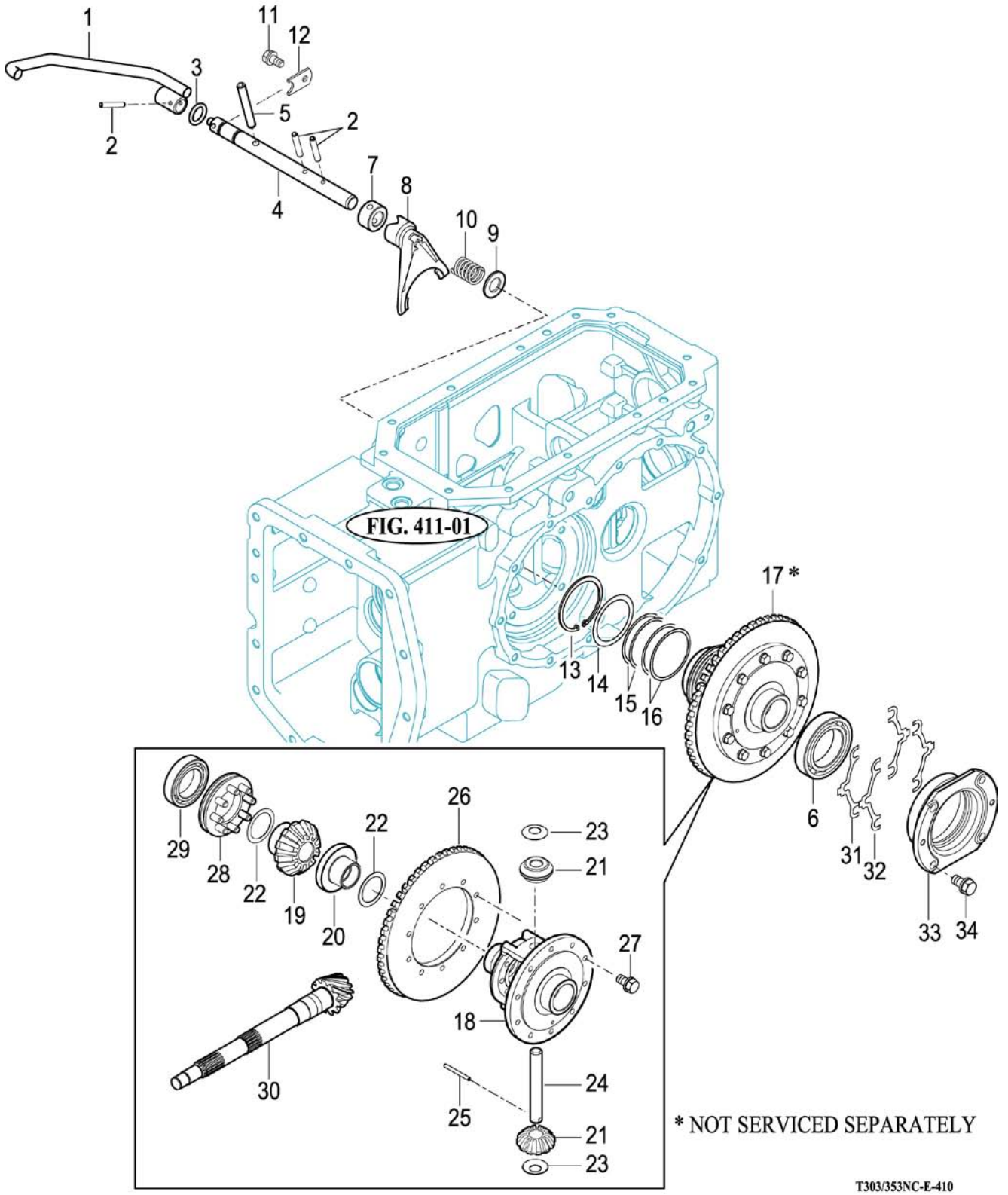
1
11
12
3
5
2
2
7
8
4
10
9
FIG. 411-01
17 *
13
14
15
16
6
31
32
33
34
29
28
22
19
20
22
26
23
21
27
18
24
25
21
23
30
* NOT SERVICED SEPARATELY
T303/353NC-E-410

NOTE

FIG 410 T300NC / T350NC	DIFF LOCK	P1	Year / Month 2008 / 12	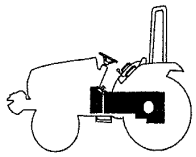

KEY NO.	PART NO.	DESCRIPSTION	SPEC.	QTY.	REPAIR	EFFECTIVE DATE	REMARKS
410 001	16703192204	PEDAL COMP , DIFF LOCK		1			
410 002	V5801406032	PIN , SPRING	6X32	3			
410 003	V7201024016	O-RING , P	P16	1	B		
410 004	16703180153	SHAFT , DIFF LOCK		1			
410 005	V5801408060	PIN , SPRING	8X60	1			
410 006	V6041106011	BEARING , BALL/HL1	6011HL1	1			
410 007	16703180161	HUB , DIFFLOCK		1			
410 008	16703180021M	FORK , DIFF LOCK		1			
410 009	V4111600200	WASHER , PLAIN	M20	1			
410 010	17973030420	SPRING		1			
410 011	V2173608016	BOLT , HEX/S	M8X16	1			
410 012	16703180191	PLATE , STOP		1			
410 013	V7051400750	RING , C TYPE		1			
410 014	16703180511	SHIM , O/0.5		1			
410 015	16703180080	SHIM , O/0.2		2			
410 016	16703180090	SHIM , O/0.1		2			
410 017	16703000002	DIFF ASSY , RR		1			
410 018	16703180011M	CASE , DIFF		1			
410 019	16703180030	GEAR , BEVEL 20T(RH)		1			
410 020	16703180060	GEAR , BEVEL 20T(LH)		1			
410 021	16703180040	PINION , DIFF 12		2			
410 022	16703180521	WASHER , THRUST		2			
410 023	14443180050	COLLAR , PINION THRUST		2			
410 024	16703180071	SHAFT , DIFF PINION		1			
410 025	V5801405036	PIN , SPRING	5X36	1			
410 026	16703002020	GEAR , BEVEL 52		1			
410 027	V2173608020	BOLT , HEX/S	M8X20	10			
410 028	16703181201	CLUTCH COMP , DIFF LOCK		1			
410 029	V6041106009	BEARING , BALL/HL1	6009HL1	1			
410 030	16703002011	PINION , DRIVE 9		1			
410 031	16703180181	SHIM , O/0.1		2			
410 032	16703180171	SHIM , O/0.2		2			
410 033	16703180052M	METAL , DIFF CASE R		1			
410 034	V2173610025	BOLT , HEX/S	M10X25	4			

NOTE	

FIG 411 T300/350NC	TRANSMISSION REAR CASE	P1	Year / Month 2008 / 12	

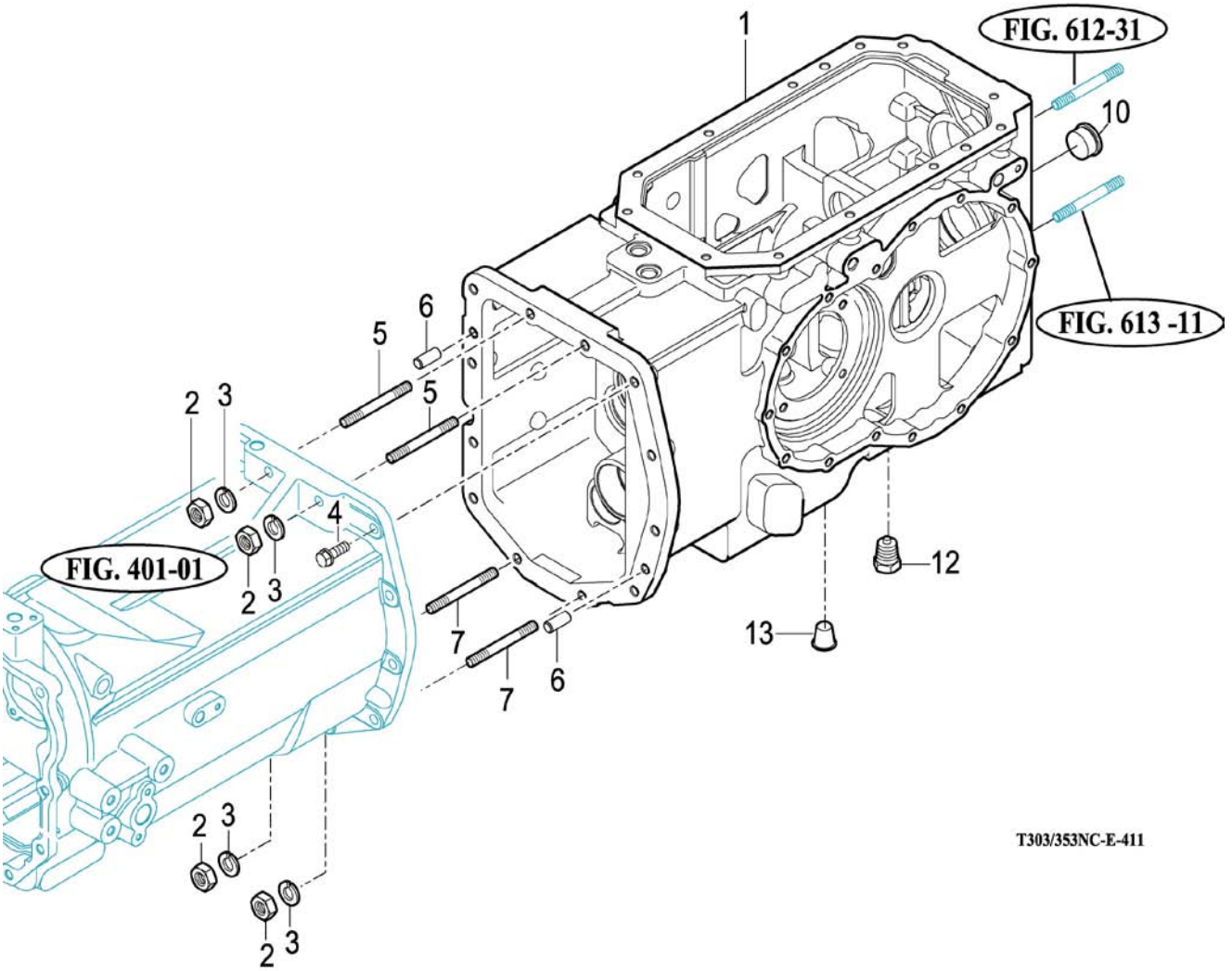

NOTE	

FIG 411 T300NC / T350NC	트랜스미션 리어 케이스 TRANSMISSION REAR CASE	P1	Year / Month 2008 / 12	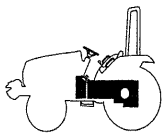

KEY NO.		PART NO.	DESCRIPSTION	SPEC.	QTY.	REPAIR	EFFECTIVE DATE	REMARKS
411	001	14942400013M	CASE , RR TRANSMISSION		1			
411	002	V3043600120	NUT , HEX/2	M12	4			
411	003	V4011600120	WASHER , SPRING	M12	12			
411	004	V2013612040	BOLT , HEX	M12X40	8			
411	005	V2514412040	BOLT , STUD/2	M12X40	2			
411	006	V5201010022	PIN , PARALLEL/A	10X22	2			
411	007	V2514412040	BOLT , STUD/2	M12X40	2			
411	010	16003062000	GAUGE ASSY , OIL LEVEL		1	C		
411	012	16701015001	PLUG ASSY , DRAIN (MAGNET)		1			
411	013	14273170040	CAP , M14		6			

NOTE	

FIG 412 T300/350NC	REAR AXLE HOUSINGS (1)	P1	Year / Month 2008 / 12	

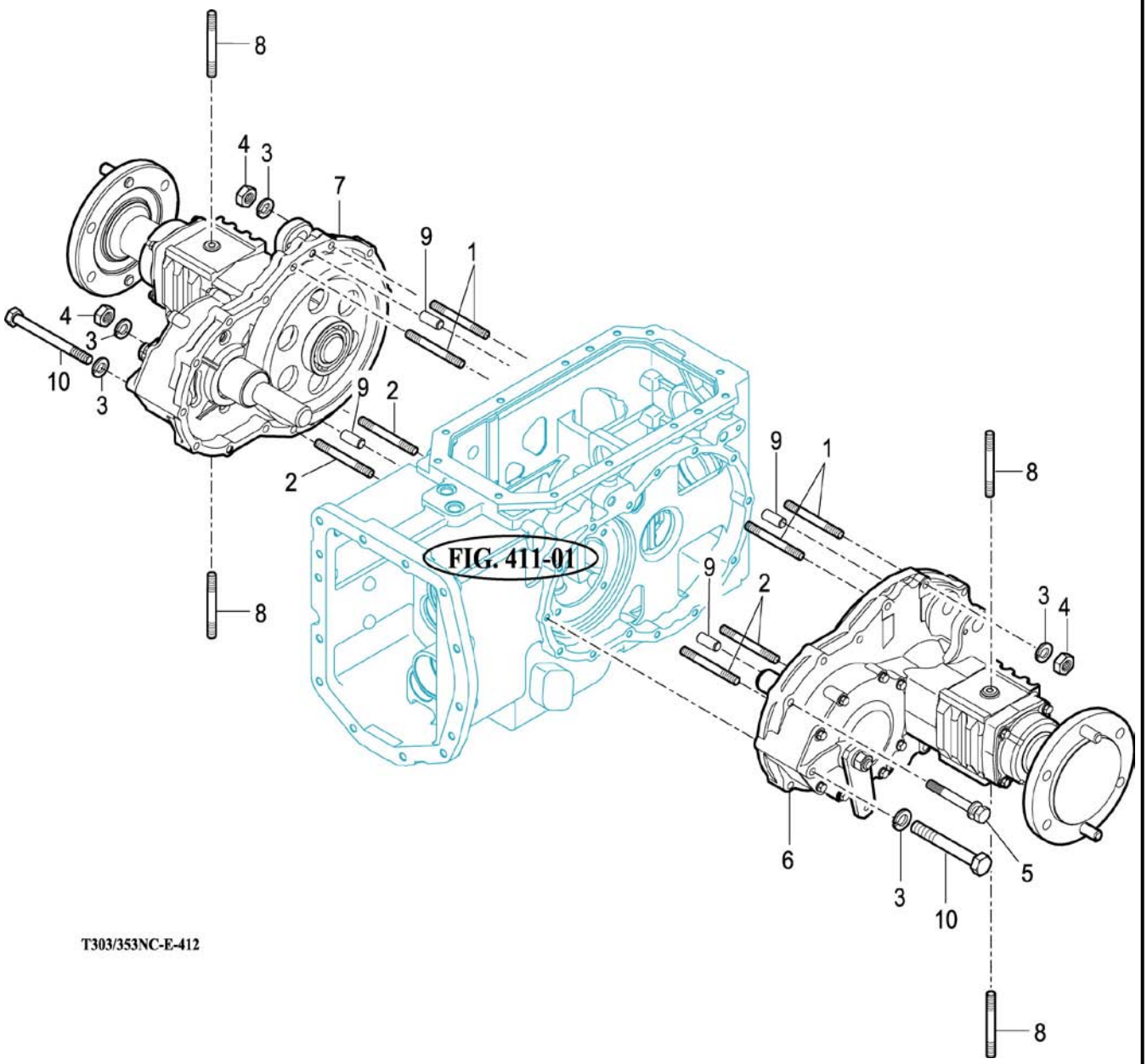

NOTE

FIG 412 T300NC / T350NC	REAR AXLE HOUSINGS (1)	P1	Year / Month 2008 / 12	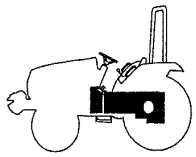

KEY NO.	PART NO.	DESCRIPSTION	SPEC.	QTY.	REPAIR	EFFECTIVE DATE	REMARKS
412 001	V2514410060	BOLT , STUD/2	M10X60	4			
412 002	V2514410050	BOLT , STUD/2	M10X50	4			
412 003	V4011600100	WASHER , SPRING	M10	10			
412 004	V3043600100	NUT , HEX/2	M10	8			
412 005	V2174610050	BOLT , HEX/S	M10X50	28			
412 006	16703210013M	HOUSING , LH AXLE		1			
412 007	16703210013M	HOUSING , RH AXLE		1			
412 008	V2514410028	BOLT , STUD/2	M10X28	4			
412 009	V5201010022	PIN , PARALLEL/A	10X22	4			
412 010	V2013610130	BOLT , HEX	M10X130	2			

NOTE	

FIG 413 T300/350NC	REAR AXLE HOUSINGS (2)	P1	Year / Month 2008 / 12	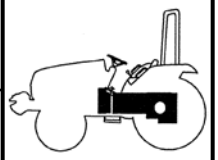

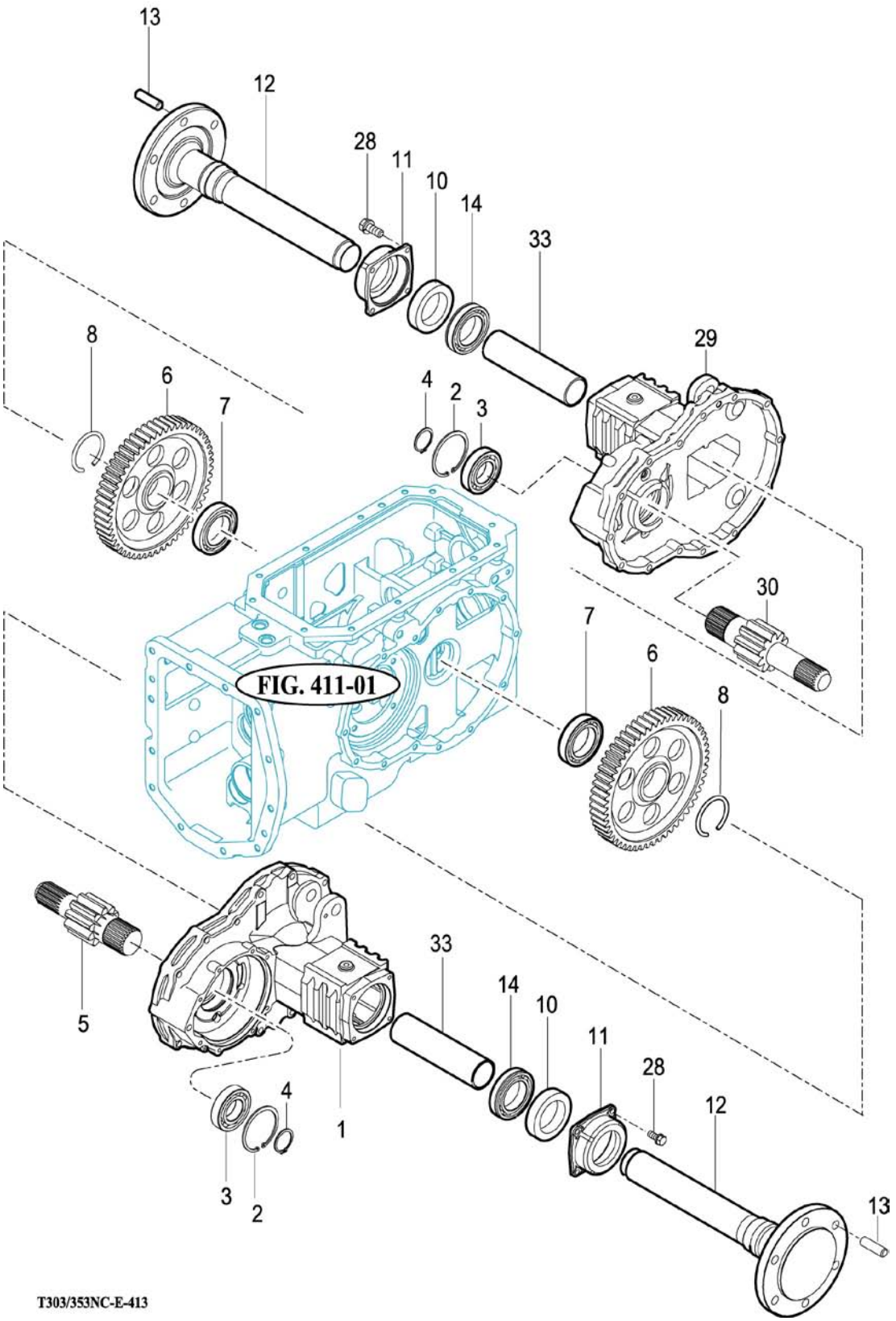

NOTE

FIG 413 T300NC / T350NC	REAR AXLE HOUSINGS (2)	P1	Year / Month 2008 / 12	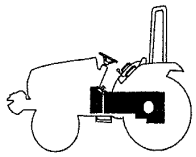

KEY NO.	PART NO.	DESCRIPSTION	SPEC.	QTY.	REPAIR	EFFECTIVE DATE	REMARKS
413 001	16703210013M	HOUSING , RR AXLE		1			
413 002	V7051400800	C-RING , HOLE	80	2			
413 003	V6041106208	BEARING , BALL/HL1	6208HL1	2			
413 004	V7041400400	C-RING , SHAFT	40	2			
413 005	16703230011	PINION , LH WHEEL		1			
413 006	16703240022	GEAR(SPUR/54) , WHEEL		2			
413 007	V6041106209	BEARING , BALL/HL1	6209HL1	2			
413 008	14443240051	RING , STOP		2			
413 010	14443240070	SEAL , SHAFT		2	B		
413 011	14443240061M	METAL , AXLE SHAFT SEAL		2			
413 012	16703240101	SHAFT , WHEEL		2			
413 013	15603200010	BOLT , STUD M16X30		4			
413 014	V6041606011	BEARING , BALL/HL1NR	6011HL1N	2			
413 028	V2173608020	BOLT , HEX/S	M8X20	8			
413 029	16703210013M	HOUSING , RR AXLE		1			
413 030	16703230021	PINION , RH WHEEL		1			
413 033	14443240030	COLLAR , 56X65X240		2			

NOTE	

FIG 414 T300/350NC	MAIN CHANGE LEVER	P1	Year / Month 2008 / 12	

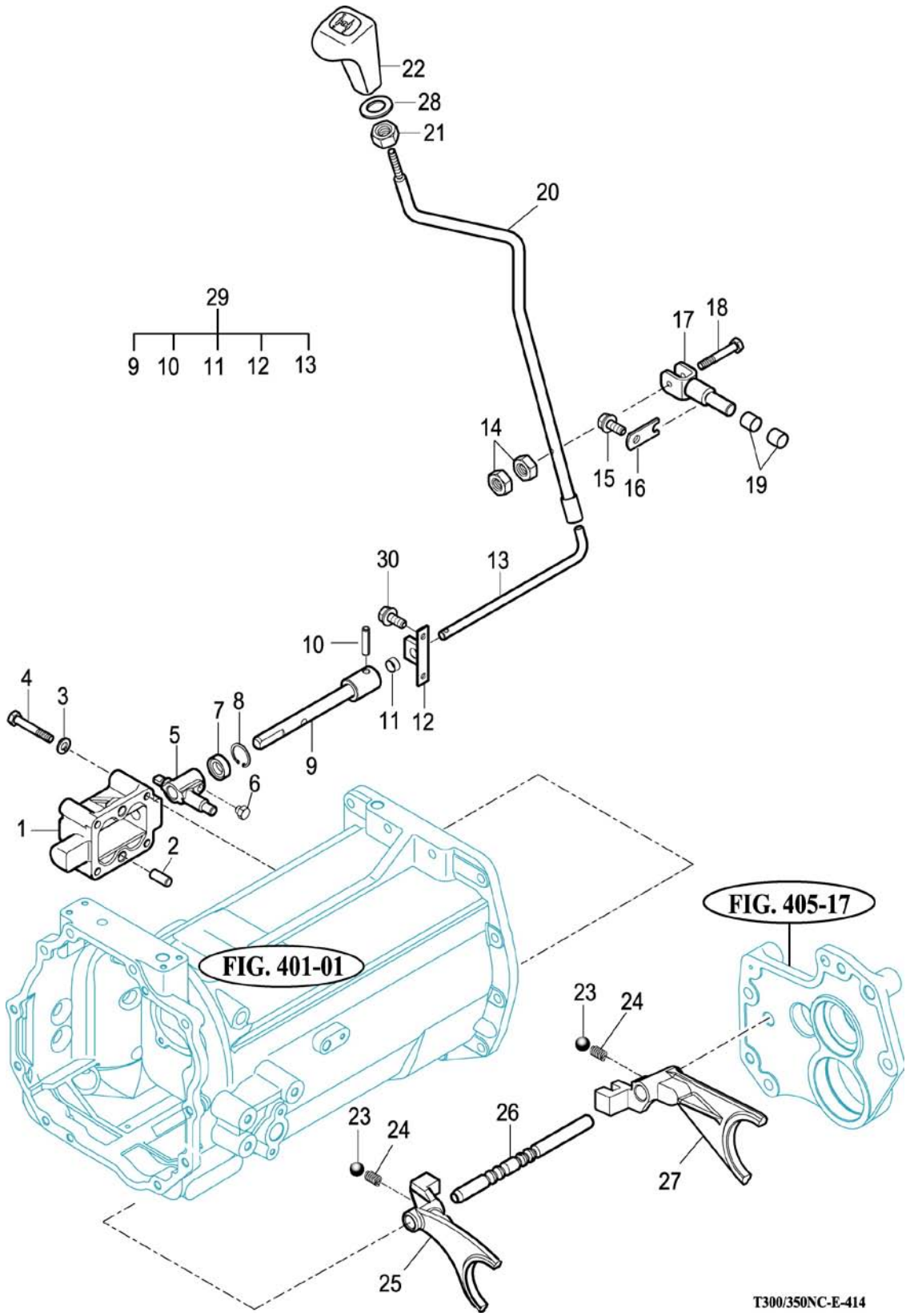

NOTE

FIG 414 T300NC / T350NC	MAIN CHANGE LEVER	P1	Year / Month 2008 / 12	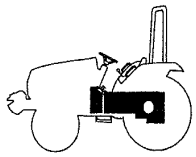

KEY NO.	PART NO.	DESCRIPSTION	SPEC.	QTY.	REPAIR	EFFECTIVE DATE	REMARKS
414 001	14572230330M	METAL , MAIN		1			
414 002	V5201010022	PIN , PARALLEL/A	10X22	2			
414 003	V4011600080	WASHER , SPRING	M8	4			
414 004	V2013608060	BOLT , HEX	M8X60	4			
414 005	14572230320M	ARM , CHANGE		1			
414 006	15602231600	BOLT , SET SEAL LOCK		1			
414 007	V7441142508	SEAL , OIL/D	D14258	1	B		
414 008	V7051400250	C-RING , HOLE	25	1			
414 009	16702244300	ROD COMP , IN CHANGE		1			
414 010	V5801406025	PIN , SPRING	6X25	1			
414 011	16702240060	BUSH , 12X14X08		1	C		
414 012	16702234300	BRACKET COMP , MAIN SHIFTER		1			
414 013	16702233500	ROD COMP , OUT CHANGE		1			
414 014	V3002600060	NUT , HEX/1	M6	2			
414 015	V2173608016	BOLT , HEX/S	M8X16	1			
414 016	16702230371	PLATE		1			
414 017	16702244202	PIN COMP , MAIN CHANGE		1			
414 018	16702240051	BOLT , M6X45		1			
414 019	15603142910	BUSH , 16X18X15		2			
414 020	16702244104	LEVER COMP , MAIN RANGE		1			
414 021	V3342600100	NUT , HEX FINE/2	M10	1			
414 022	13212810071	GRIP COMP , MAIN SHIFTER		1			
414 023	V6802000010	BALL , STEEL		2			
414 024	13022250030	SPRING , SHIFTER		2			
414 025	16702230022M	FORK , 1ST/2ND		1			
414 026	16702230300	STAY , MAIN SHIFT		1			
414 027	13212230020M	FORK (2-3)		1	A		
414 028	V4111600100	WASHER , PLAIN	M10	1			
414 029	16702232001	ROD SET , MAIN SHIFT		1			
414 030	V2173608025	BOLT , HEX/S	M8X25	2			

NOTE	

FIG 415 T300/350NC	SUB CHANGE LEVER	P1	Year / Month 2008 / 12	

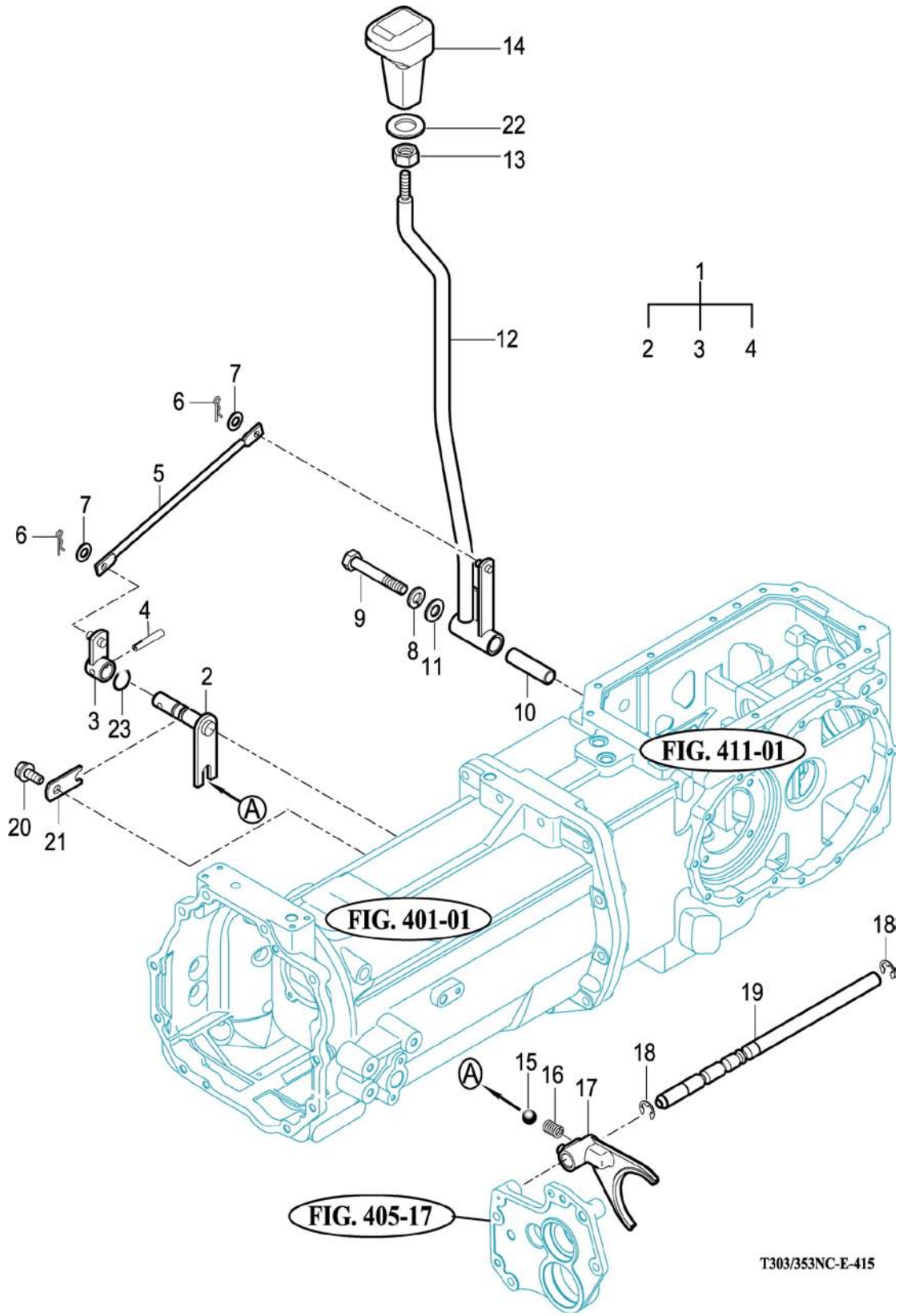

NOTE

FIG 415 T300NC / T350NC	SUB CHANGE LEVER	P1	Year / Month 2008 / 12	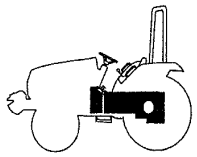

KEY NO.	PART NO.	DESCRIPSTION	SPEC.	QTY.	REPAIR	EFFECTIVE DATE	REMARKS
415 001	16702432002	ARM SET, RANGE		1			
415 002	16702432102	HOOK COMP , RANGE		1			
415 003	16702432201	ARM COMP , RANGE		1			
415 004	V5111006036	PIN , TAPER SPLIT	6X36	1			
415 005	16702440021	ROD , RANGE 275		1			
415 006	V5601600008	PIN , SNAP	8	2			
415 007	V4111600080	WASHER , PLAIN	M8	2			
415 008	V4011600140	WASHER , SPRING	M14	1			
415 009	V2013612085	BOLT , HEX	M12X85	1			
415 010	16702440070	HIB(13X17X61)		1			
415 011	V4111600120	WASHER , PLAIN	M12	1			
415 012	16702442103	LEVER COMP , RANGE		1			
415 013	V3342600100	NUT , HEX FINE/2	M10	1			
415 014	14572442401	GRIP COMP , SUB SHIFT GRIP		1			
415 015	V6802000010	BALL , STEEL		1			
415 016	13022250030	SPRING , SHIFTER		1			
415 017	16702430010M	FORK , RANGE		1			
415 018	V7081400100	E-RING	10	2			
415 019	16702430021	STAY , RANGE SHIFT		1			
415 020	V2173608016	BOLT , HEX/S	M8X16	1			
415 021	16702230371	PLATE		1			
415 022	V4111600100	WASHER , PLAIN	M10	1			
415 023	V7201024012	O-RING , P	P12	1	B		

NOTE	

FIG 416 T300/350NC	REVERSE LINK	P1	Year / Month 2008 / 12	

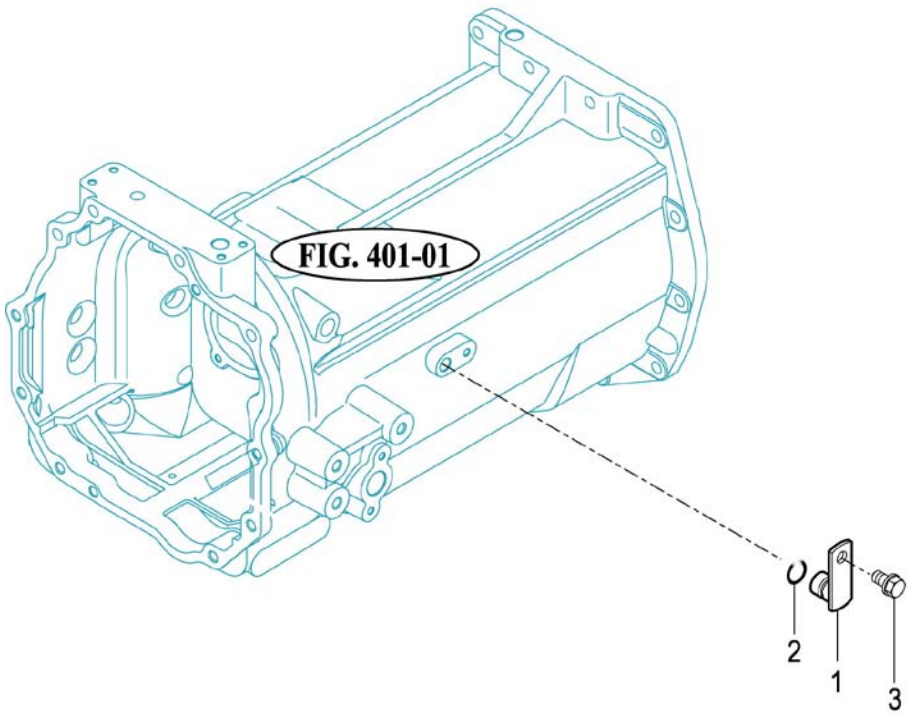

T300/350NC-E-416

NOTE	

FIG 416 T300NC / T350NC	REVERSE LINK	P1	Year / Month 2008 / 12	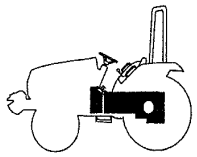

KEY NO.		PART NO.	DESCRIPSTION	SPEC.	QTY.	REPAIR	EFFECTIVE DATE	REMARKS
416	001	19022102100	COVER COMP		1			
416	002	V7201024012	O-RING , P	P12	1	B		
416	003	V2173608016	BOLT , HEX/S	M8X16	1			

NOTE	

FIG 418 T300/350NC	4WD CHANGE LEVER	P1	Year / Month 2008 / 12	

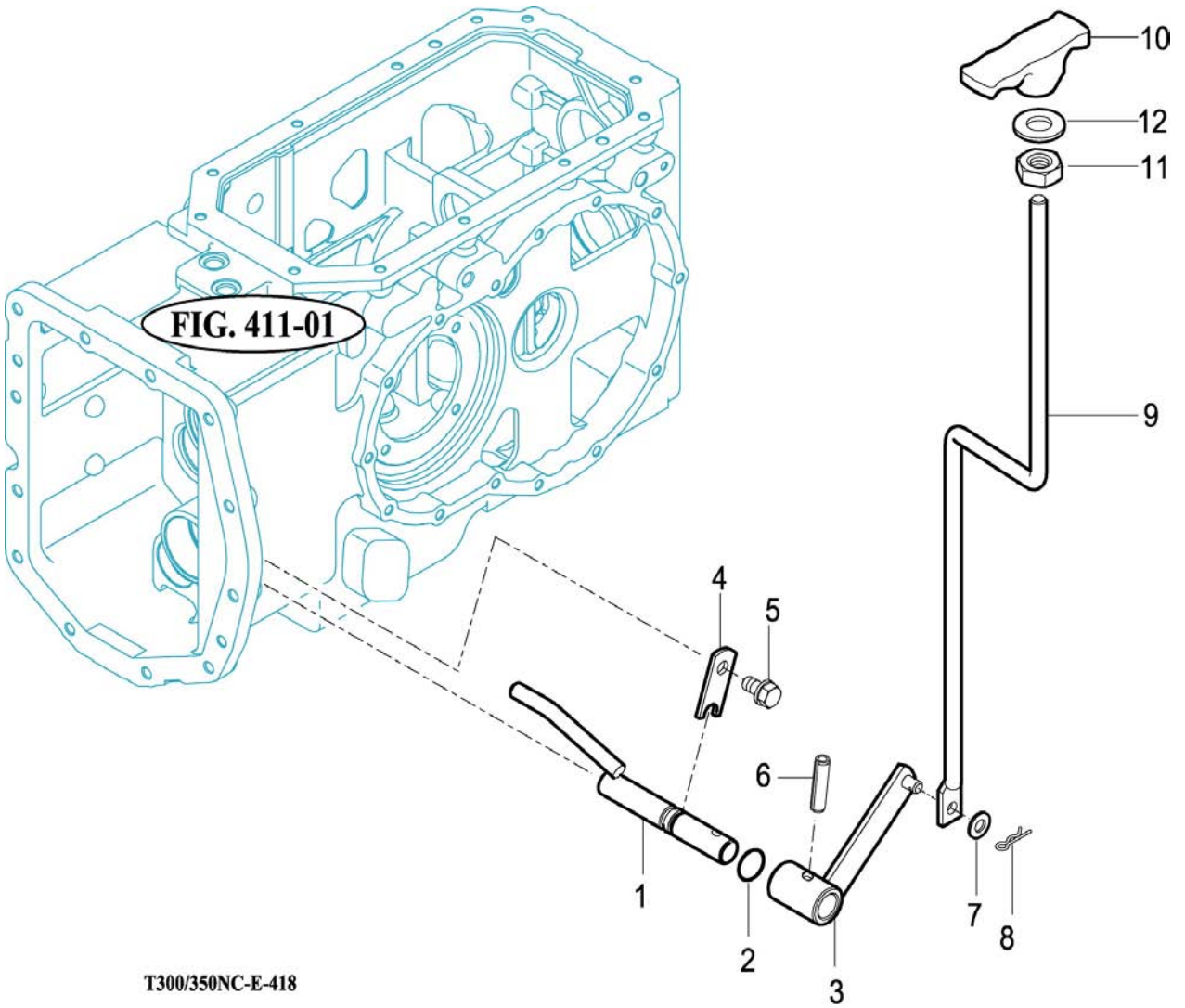

NOTE	

FIG 418 T300NC / T350NC	4WD CHANGE LEVER	P1	Year / Month 2008 / 12	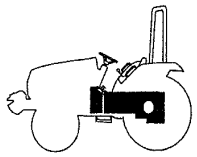

KEY NO.	PART NO.	DESCRIPSTION	SPEC.	QTY.	REPAIR	EFFECTIVE DATE	REMARKS
418 001	16703122103	ARM COMP , 4WD		1			
418 002	V7201024012	O-RING , P	P12	1	B		
418 003	16702622103	ARM COMP , 4WD		1			
418 004	16702230371	PLATE		1			
418 005	V2173608016	BOLT , HEX/S	M8X16	1			
418 006	V5801406025	PIN , SPRING	6X25	1			
418 007	V4111600080	WASHER , PLAIN	M8	1			
418 008	V5601600008	PIN , SNAP	8	1			
418 009	13212632110GB	LEVER , 4WD		1			
418 010	16702190060	GRIP , 4WD		1			
418 011	V3342600100	NUT , HEX FINE/2	M10	1			
418 012	V4111600100	WASHER , PLAIN	M10	1			

NOTE	

FIG 501 T300/T350NC	FRONT AXLE BRACKET	P1	Year / Month 2008 12	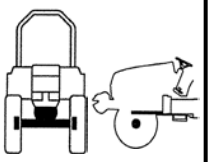

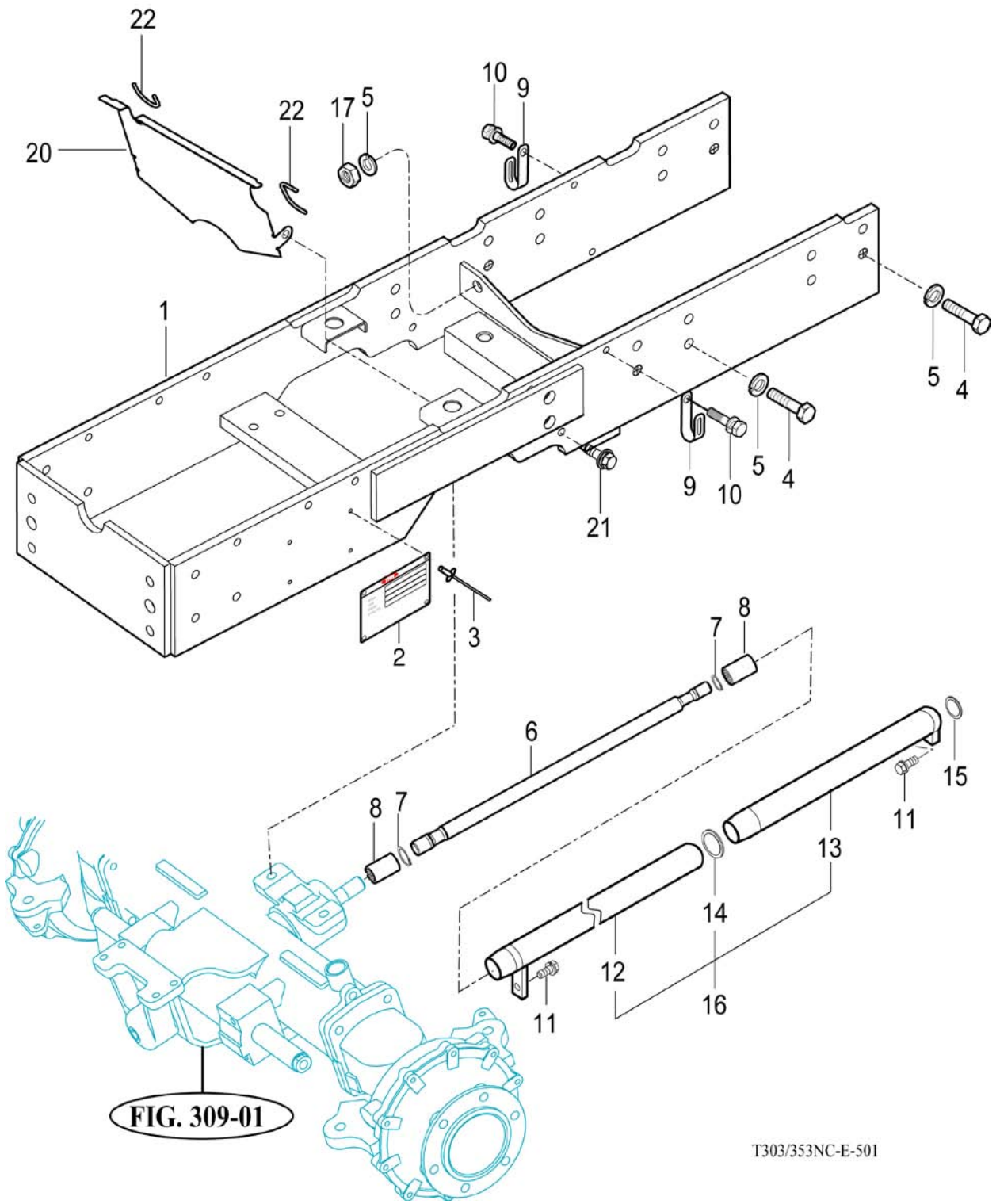

NOTE

FIG 501 T300NC / T350NC	FRONT AXLE BRACKET	P1	Year / Month 2008 / 12	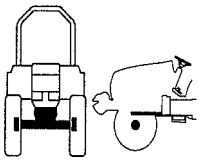

KEY NO.		PART NO.	DESCRIPSTION	SPEC.	QTY.	REPAIR	EFFECTIVE DATE	REMARKS
501	001	13014072202GB	FRAME COMP , FR AXLE		1			
501	002	T0019010020	MODEL , NAME		1			
501	003	V5502040093	RIVET , BLIND		4			
501	004	V2024612035	BOLT , HEX FINE	M12X35	16			
501	005	V4011600120	WASHER , SPRING	M12	18			
501	006	16704100010	SHAFT , DRIVE		1			
501	007	V7041400250	C-RING , SHAFT	25	2			
501	008	14251320150	COUPLING		2			
501	009	14256210040	CLAMP , HARNESS		3			
501	010	V2183608025	BOLT , HEX/SP	M8X25	3			
501	011	V2113606016	BOLT , HEX /S	M6X16	2			
501	012	16704102000GB	PIPE COMP , A		1			
501	013	16704102300GB	PIPE COMP , B		1			
501	014	V7201035038	O-RING , P	P38	1	B		
501	015	V7201035041	O-RING , P	P41	1	B		
501	016	16704102201	PIPE SET(A,B) , 4WD		1			
501	017	V3043600120	NUT , HEX FINE/2		2			
501	020	14824063000GB	SHIELD COMP,LOW RAD		1			
501	021	V2183608025	BOLT , HEX/SP	M8X25	2			
501	022	17681040200	PROTECTOR , HOSE		2			

NOTE	

FIG 502 T300/T350NC	FRONT DIFF. GEARS & SHAFT	P1	Year / Month 2008 12	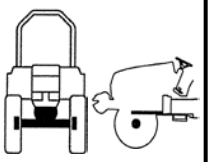

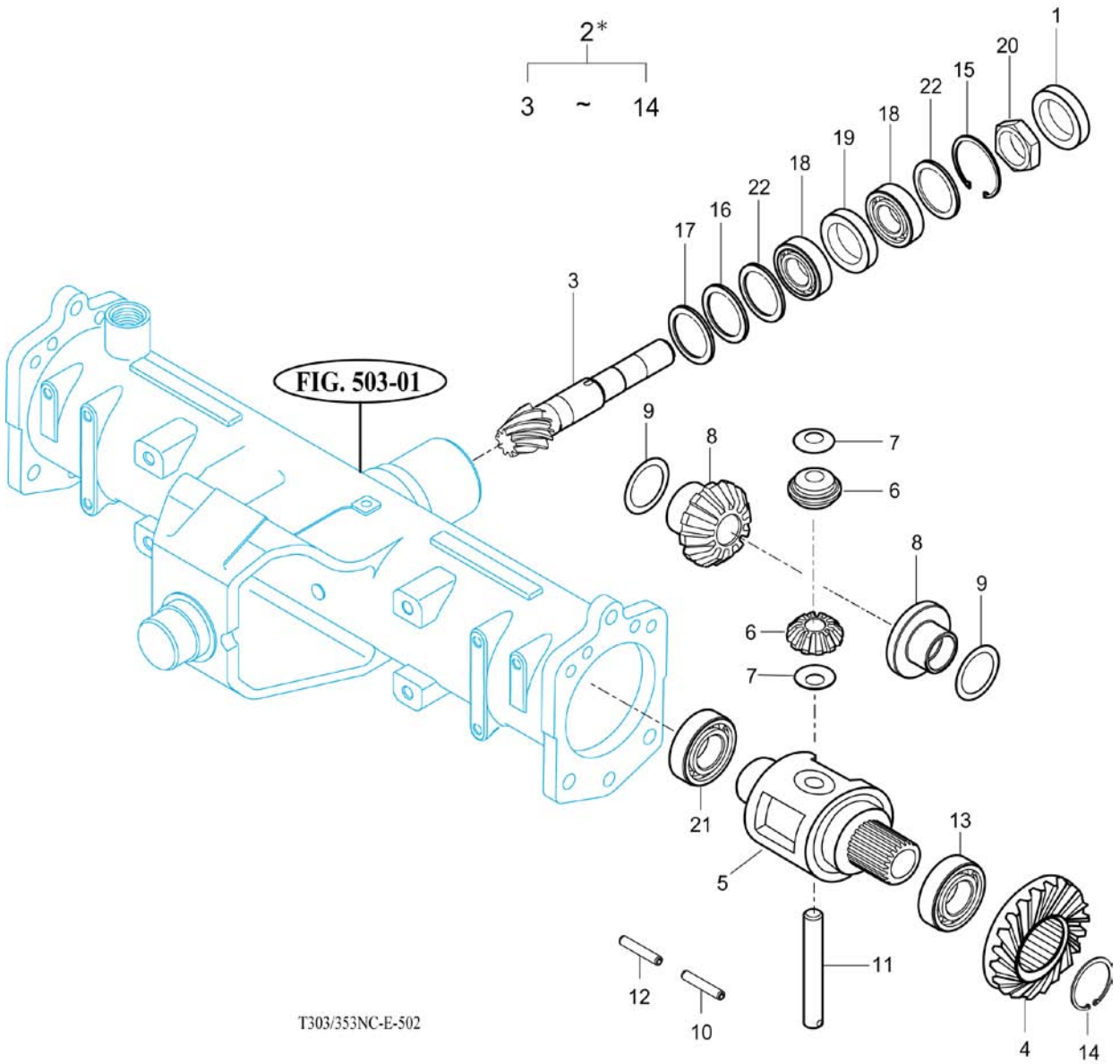

NOTE	

FIG 502 T300NC / T350NC	FRONT DIFF. GEARS & SHAFT	P1	Year / Month 2008 / 12	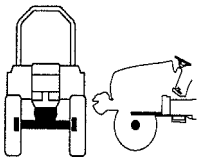

KEY NO.		PART NO.	DESCRIPSTION	SPEC.	QTY.	REPAIR	EFFECTIVE DATE	REMARKS
502	001	V7441256210	SEAL , OIL/D	D256210	1	B		
502	002	16704112000	DIFF ASSY , FF		1			
502	003	16704112010	PINION , BEVEL 8T		1			
502	004	16704112110	GEAR , BEVEL 35T		1			
502	005	16704310030	CASE , FR DIFF		1			
502	006	16704320020	PINION , DIFF(12)		2			
502	007	14273010050	COLLAR , THRUST		2			
502	008	16704310160	GEAR , DIFF SIDE(20)		2			
502	009	16704320050	WASHER , THRUST		2			
502	010	V5801405025	PIN , SPRING	5X25	1			
502	011	16704110060	SHAFT , DIFF PINION		1			
502	012	V5801403025	PIN , SPRING	3X25	1			
502	013	V6001106212	BEARING , BALL	6212	1			
502	014	17994420060	SNAP RING , C TYPE		1			
502	015	V7051400620	C-RING , HOLE	62	1			
502	016	14254310080	SHIM , A		1			
502	017	14152050160	SHIM , B		1			
502	018	15024320020	BEARING , TAPER ROLLER		2			
502	019	16704112120	COLLAR		1			
502	020	14884110090	NUT , M30		1			
502	021	V6001106211	BEARING , BALL	6211	1			
502	022	16704110121	SHIM		2			

NOTE	

FIG 503 T300/T350NC	FRONT AXLE HOUSING	P1	Year / Month 2008 12	

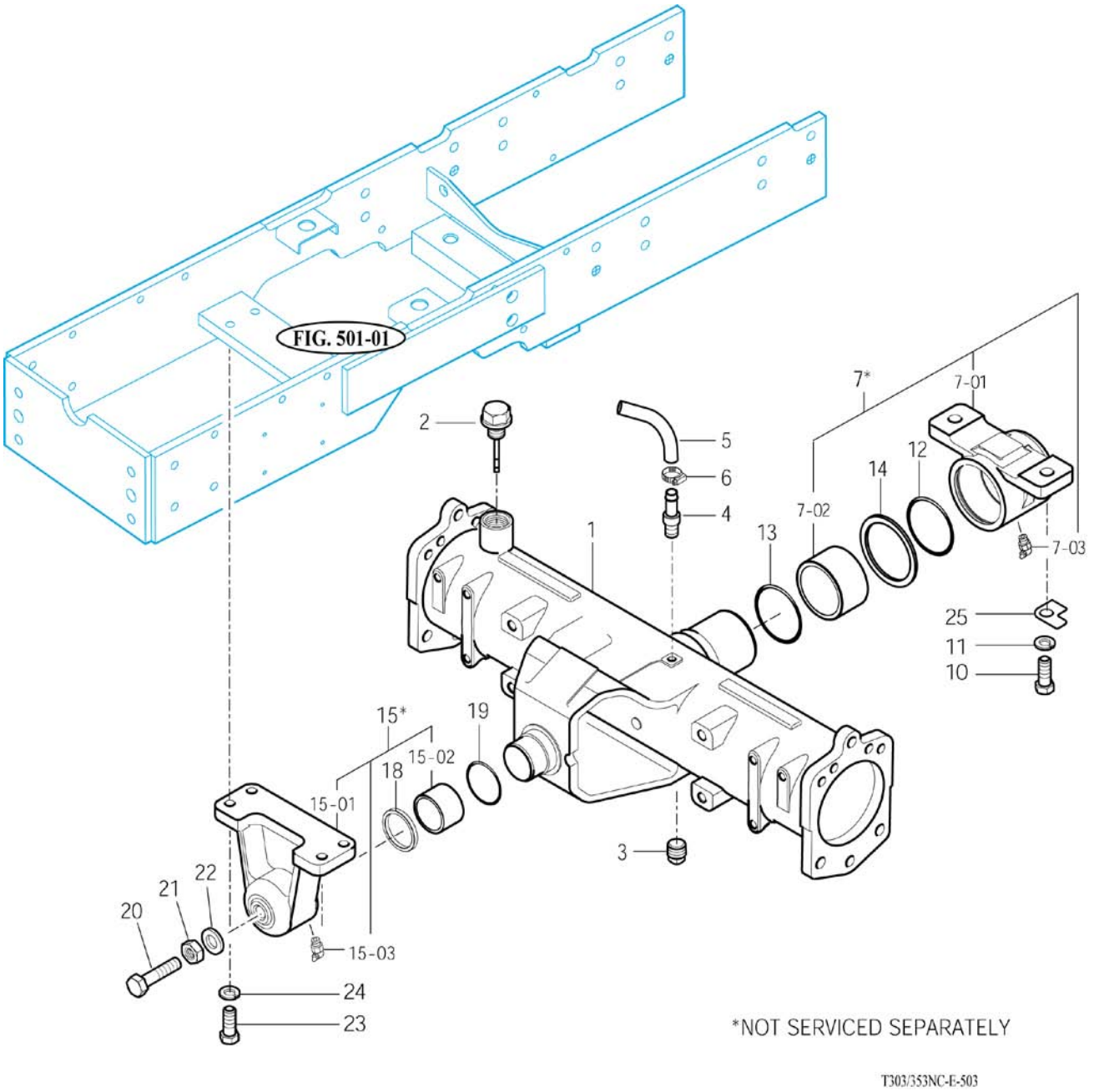

NOTE

FIG 503 T300NC / T350NC	FRONT AXLE HOUSING	P1	Year / Month 2008 / 12	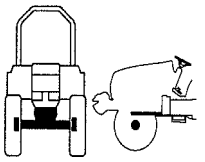

KEY NO.	PART NO.	DESCRIPSTION	SPEC.	QTY.	REPAIR	EFFECTIVE DATE	REMARKS
503 001	14524322000M	HOUSING , FRONT AXLE		1			
503 002	15184072401	CAP ASSY , OIL		1			
503 003	V7811600008	PLUG , SQUARE	R1/2	1			
503 004	17994360221	CONNECTOR		1			
503 005	16991024200	HOSE ASSY , 820		1	C		
503 006	14501410050	CLAMP , WORM 14.5		1			
503 007	16704362201	METAL ASSY , PIVOT		1			
503 008	16704362211M	METAL , PIVOT RR		1			
503 009	16704362221	BUSH , 75X80X30		1			
503 010	V2004616040	BOLT , HEX	M16X40	2			
503 011	V4011600160	WASHER , SPRING	M16	2			
503 012	V7201035040	O-RING , P	P40	1	B		
503 013	V7211031080	O-RING G	G80	1	B		
503 014	16704310040	SPACER , R		1			
503 015	16704332101	METAL ASSY , PIVOT		1			
503 016	16704332111M	METAL , PIVOT FR		1			
503 017	16704332220	BUSH , 50X55X20		1	C		
503 018	16704020020	SPACER (F)		1			
503 019	V7211031055	O-RING , G	G55	1	B		
503 020	V2014616050	BOLT , HEX	M16X50	1			
503 021	V3052600160	NUT , HEX/3	M16	1			
503 022	14444120090	WASHER , SEAL		1			
503 023	V2013612040	BOLT , HEX	M12X40	4			
503 024	V4011600120	WASHER , SPRING	M12	4			
503 025	14051060030	WASHER		2			
503 026	V7631500000	NIPPLE , GREASE/B-PT		2			
503 027	V7211031075	O-RING , G	G75	1	B		

NOTE

FIG 504 T300/T350NC	FRONT GEAR CASE (1)	P1	Year / Month 2008 12	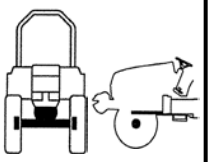

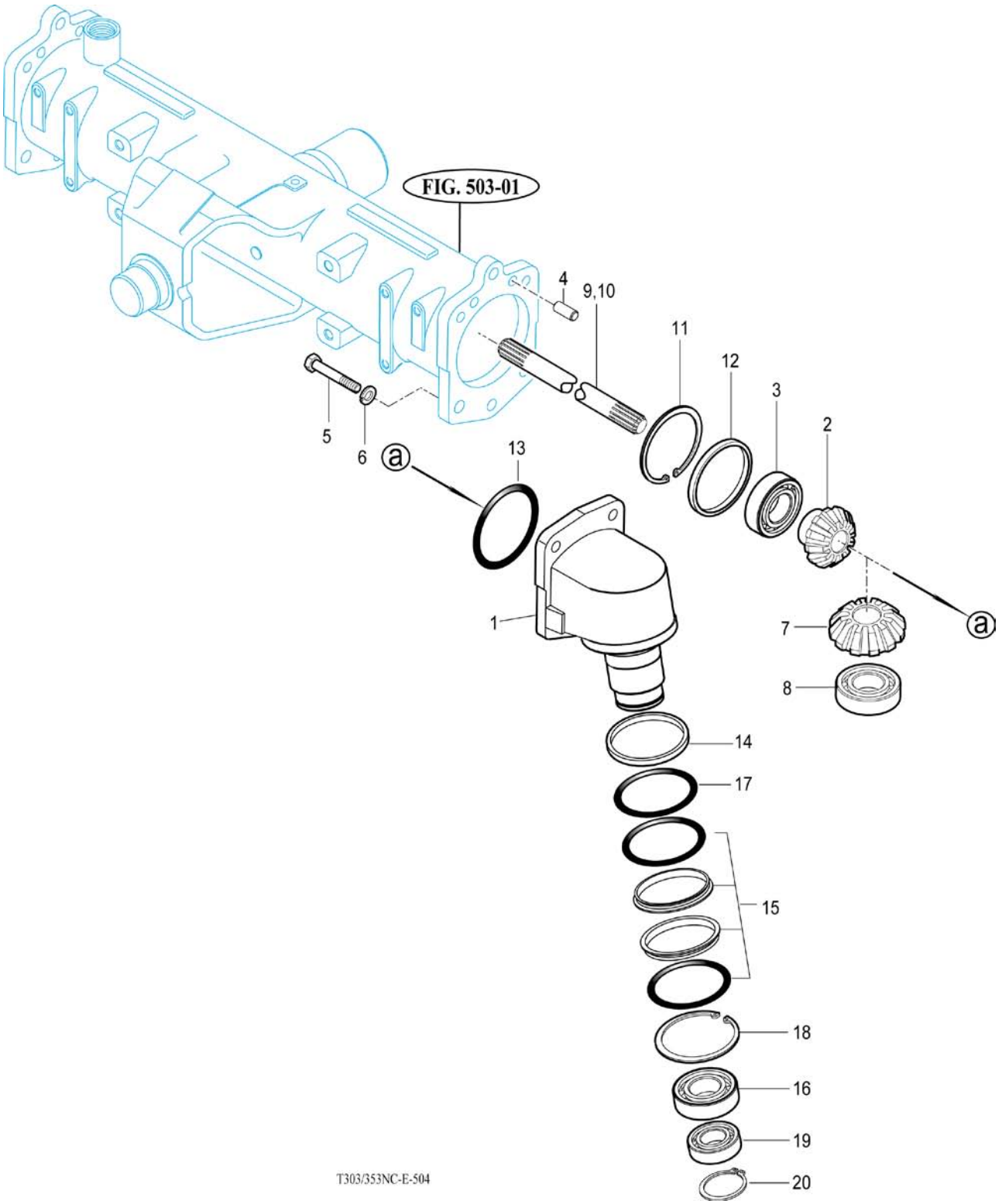

NOTE

FIG 504 T300NC / T350NC	FRONT GEAR CASE (1)	P1	Year / Month 2008 / 12	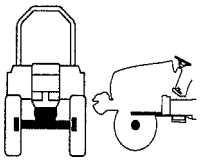

KEY NO.	PART NO.	DESCRIPSTION	SPEC.	QTY.	REPAIR	EFFECTIVE DATE	REMARKS
504 001	16704340010M	CASE , FINAL DRIVE(A)		2			
504 002	16704340020	GEAR , BEVEL 9		2			
504 003	V6041106208	BEARING , BALL/HL1	6208HL1	2			
504 004	V5201012020	PIN , PARALLEL/A	12X20	4			
504 005	V2024614090	BOLT , HEX FINE	M14X90	10			
504 006	V4011600140	WASHER , SPRING	M14	10			
504 007	16704340030	GEAR , BEVEL 16		2			
504 008	V6001106207	BEARING , BALL	6207	2			
504 009	16704130010	SHAFT , 480		1			
504 010	16704130020	SHAFT , 296		1			
504 011	V7051400800	C-RING , HOLE	80	2			
504 012	16704320030	COLLAR , 68X80X2		2			
504 014	16704130080	HOUSING , SEAL		2			
504 015	16704340040	SEAL ASSY		2	B		
504 016	V6001106014	BEARING , BALL	6014	2			
504 017	V7231020115	O-RING	S115	2	B		
504 018	V7051400950	C-RING , HOLE	95	2			
504 019	V6001106012	BEARING , BALL	6012	2			
504 020	V7041400600	C-RING , SHAFT	60	2			
504 036	V7231020110	O-RING , S		2	B		

NOTE	

FIG 505 T300/T350NC	FRONT GEAR CASE (2)	P1	Year / Month 2008 12	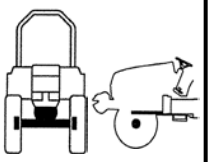

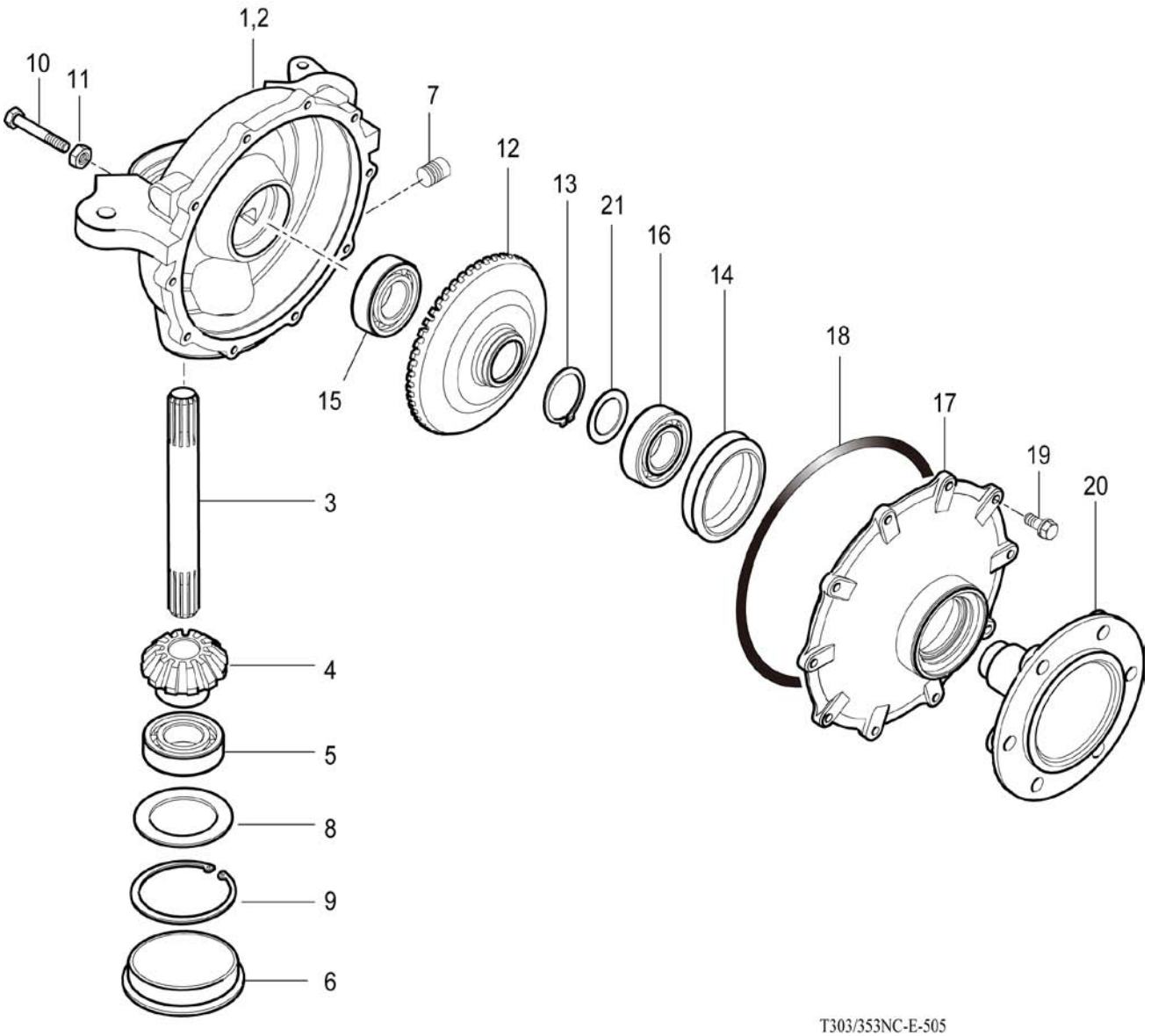

NOTE

FIG 505 T300NC / T350NC	FRONT GEAR CASE (2)	P1	Year / Month 2008 / 12	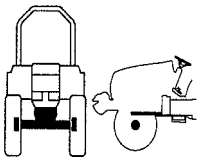

KEY NO.	PART NO.	DESCRIPSTION	SPEC.	QTY.	REPAIR	EFFECTIVE DATE	REMARKS
505 001	14514342001M	CASE , LH FINAL DRIVE(B)		1			
505 002	14514342101M	CASE , RH FINAL DRIVE(B)		1			
505 003	16704130050	SHAFT		2			
505 004	16704130100	GEAR , BEVEL 11		2			
505 005	V6001106308	BEARING , BALL	6308	2			
505 006	16704330180	CAP , 90		2	C		
505 007	V7811600006	PLUG , SQUARE	R3/8	4			
505 008	16704130060	SHIM , 75X90X2		2			
505 009	V7051400900	C-RING , HOLE	90	2			
505 010	V2014612030	BOLT , HEX	M12X30	2			
505 011	V3042600120	NUT , HEX/2	M12	2			
505 012	16704340080	GEAR , BEVEL 41		2			
505 013	V7041400500	C-RING , SHAFT	50	2			
505 014	16004340040	SEAL		2	B		
505 015	V6041106208	BEARING , BALL/HL1	6208HL1	2			
505 016	V6001106210	BEARING , BALL	6210	2			
505 017	16704340130M	COVER , WHEEL SHAFT		2			
505 018	16704340150	O RING		2	B		
505 019	V2173608025	BOLT , HEX/S	M8X25	20			
505 020	16704340070	SHAFT , WHEEL		2			
505 021	16709510080	WASHER , 50X60X2		2			

NOTE	

FIG 601 T300/350NC	GEAR PUMP	P1	Year / Month 2008/ 12	

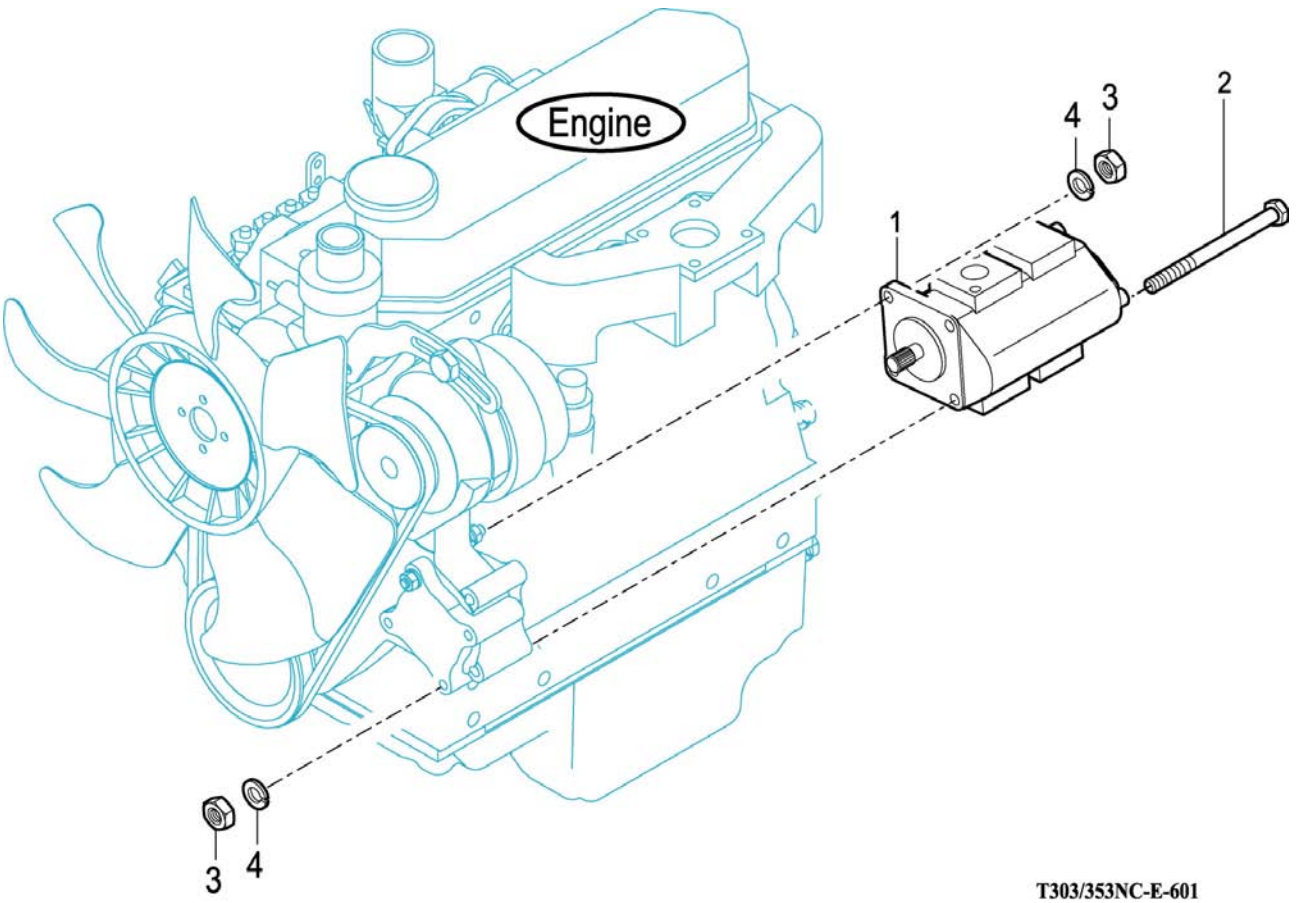

NOTE

FIG 601 T300NC / T350NC	GEAR PUMP	P1	Year / Month 2008 / 12	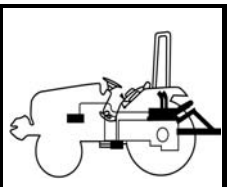

KEY NO.		PART NO.	DESCRIPSTION	SPEC.	QTY.	REPAIR	EFFECTIVE DATE	REMARKS
601	001	14945103102	PUMP ASSY , GEAR		1			
601	002	14945100010	BOLT , HEX(M8X195)		2			
601	003	V4011600080	WASHER , SPRING	M8	4			
601	004	V3043600080	NUT , HEX/2	M8	4			

NOTE	

FIG 602 T300/350NC	CYLINDER CASE	P1	Year / Month 2008/ 12	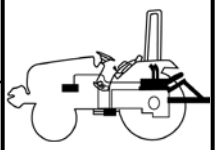

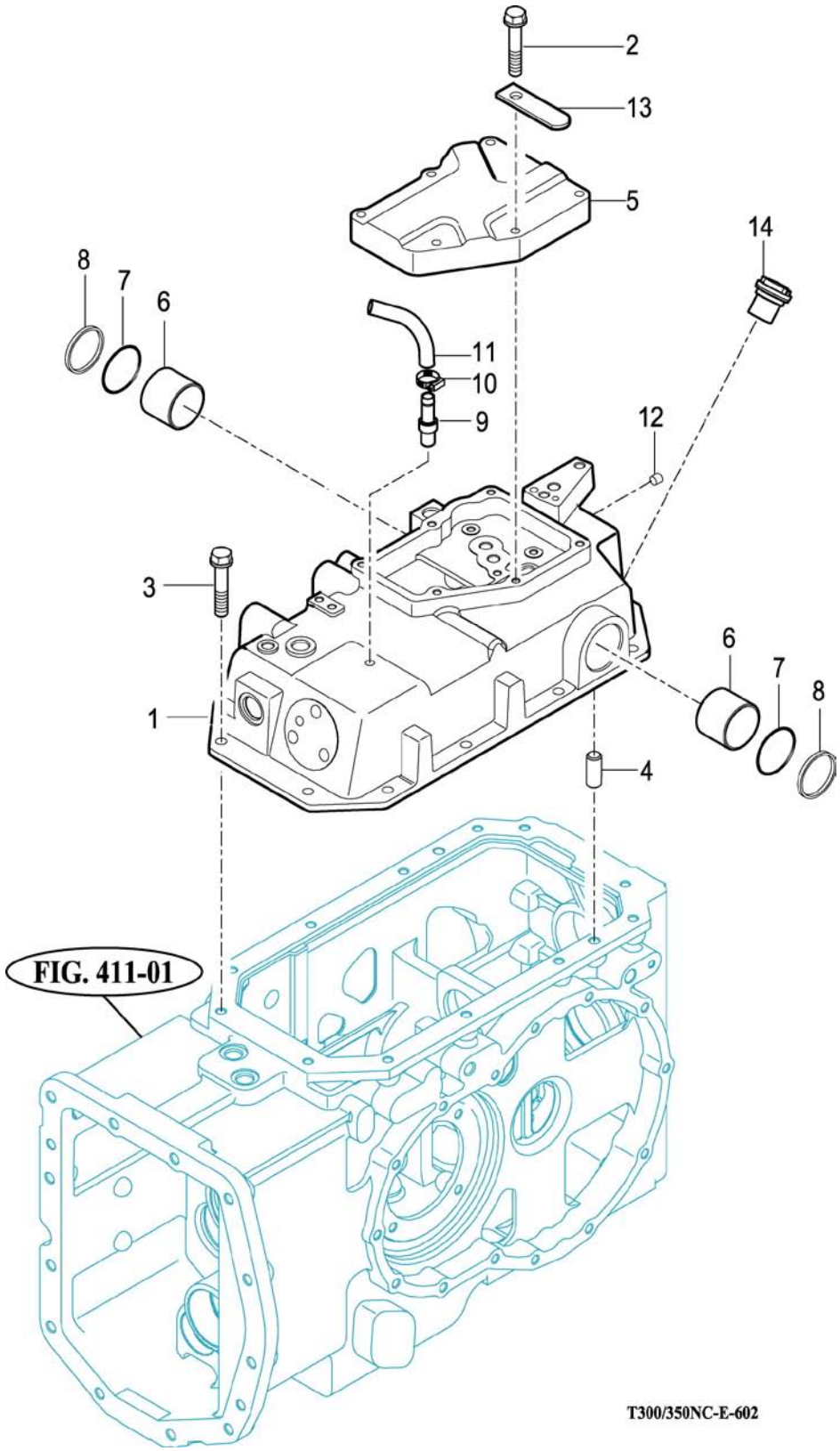

NOTE

FIG 602 T300NC / T350NC	CYLINDER CASE	P1	Year / Month 2008 / 12	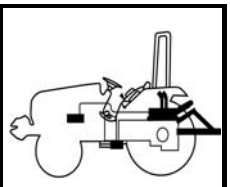

KEY NO.		PART NO.	DESCRIPSTION	SPEC.	QTY.	REPAIR	EFFECTIVE DATE	REMARKS
602	001	16705010015M	CASE , CYLINDER		1			
602	002	V2173608045	BOLT , HEX/S	M8X45	6			
602	003	V2173610030	BOLT , HEX/S	M10X30	10			
602	004	V5201010022	PIN , PARALLEL/A	10X22	2			
602	005	17995010081M	COVER , MAIN CONTROL VALVE		1			
602	006	16705010020	BUSH , 45X50X40		2			
602	007	V7211031045	O-RING , G	G45	2	B		
602	008	16705010110	RING		2			
602	009	17994360221	CONNECTOR		1			
602	010	16601850160	BAND , 20		1			
602	011	17995010150	HOSE . 500		1	C		
602	012	V7801000002	PLUG , HEX-SOCKET	R1/8	6			
602	013	37371720090	CLAMP , W/HARNESS		1			
602	014	15184322500	CAP ASSY , OIL		1			

NOTE	

FIG 603 T300/350NC	LIFT ARM	P1	Year / Month 2008/ 12	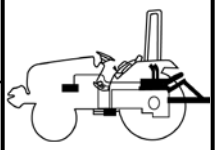

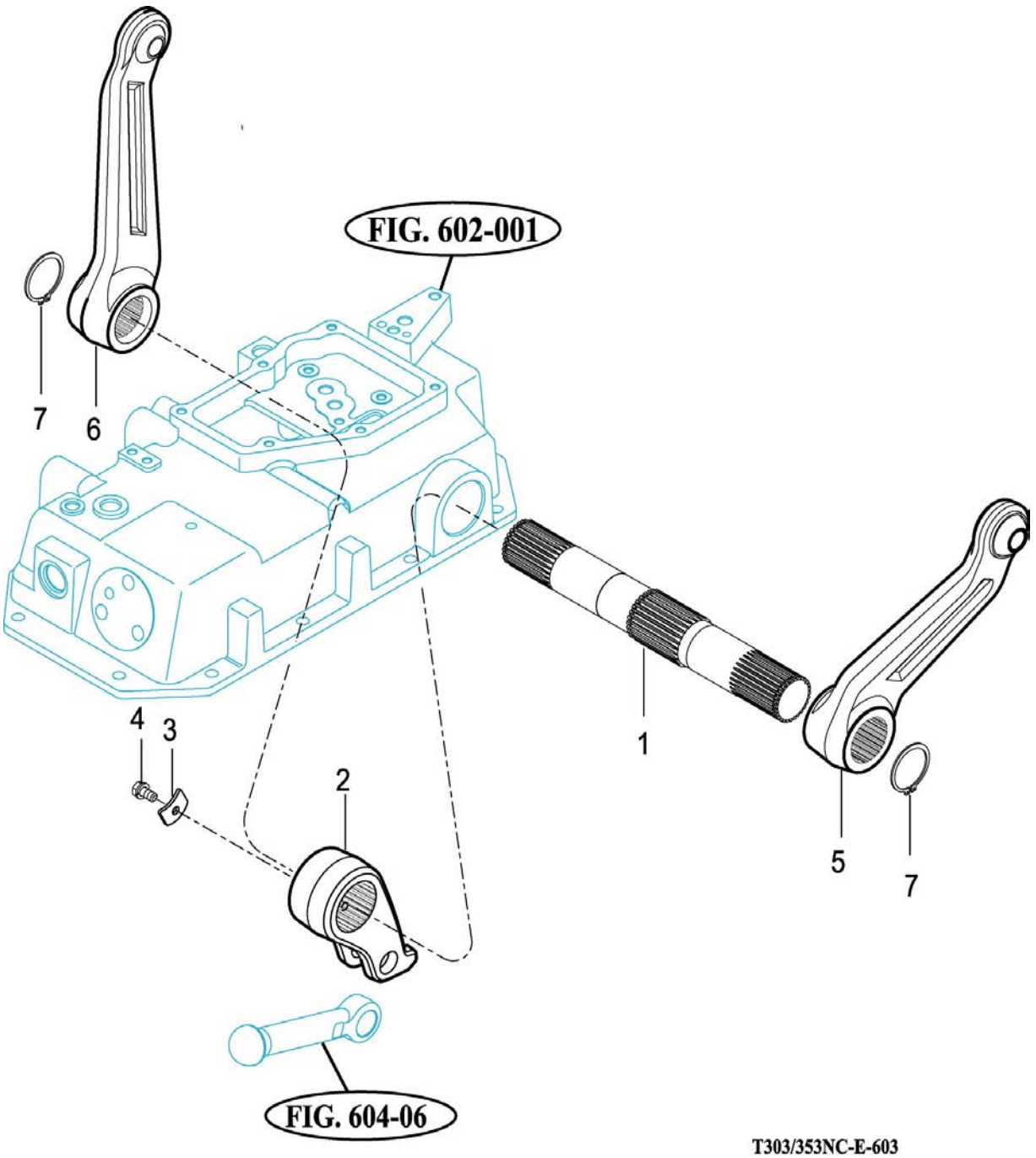

NOTE	

FIG 603 T300NC / T350NC	LIFT ARM	P1	Year / Month 2008 / 12	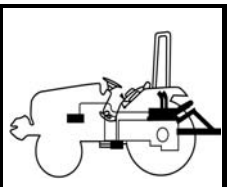

KEY NO.		PART NO.	DESCRIPSTION	SPEC.	QTY.	REPAIR	EFFECTIVE DATE	REMARKS
603	001	16705020011M	LIFT SHAFT		1			
603	002	16705020020M	LIFT , CRANK		1			
603	003	17995020030	PLATE		1			
603	004	V2173608016	BOLT , HEX/S	M8X16	1			
603	005	16705022100M	ARM ASSY , LIFT		1			
603	006	16705022100M	ARM ASSY , LIFT		1			
603	007	V7041400450	C-RING , SHAFT	45	2			

NOTE	

FIG 604 T300/350NC	CYLINDER	P1	Year / Month 2008/ 12	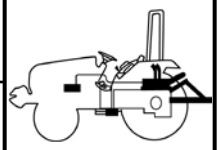

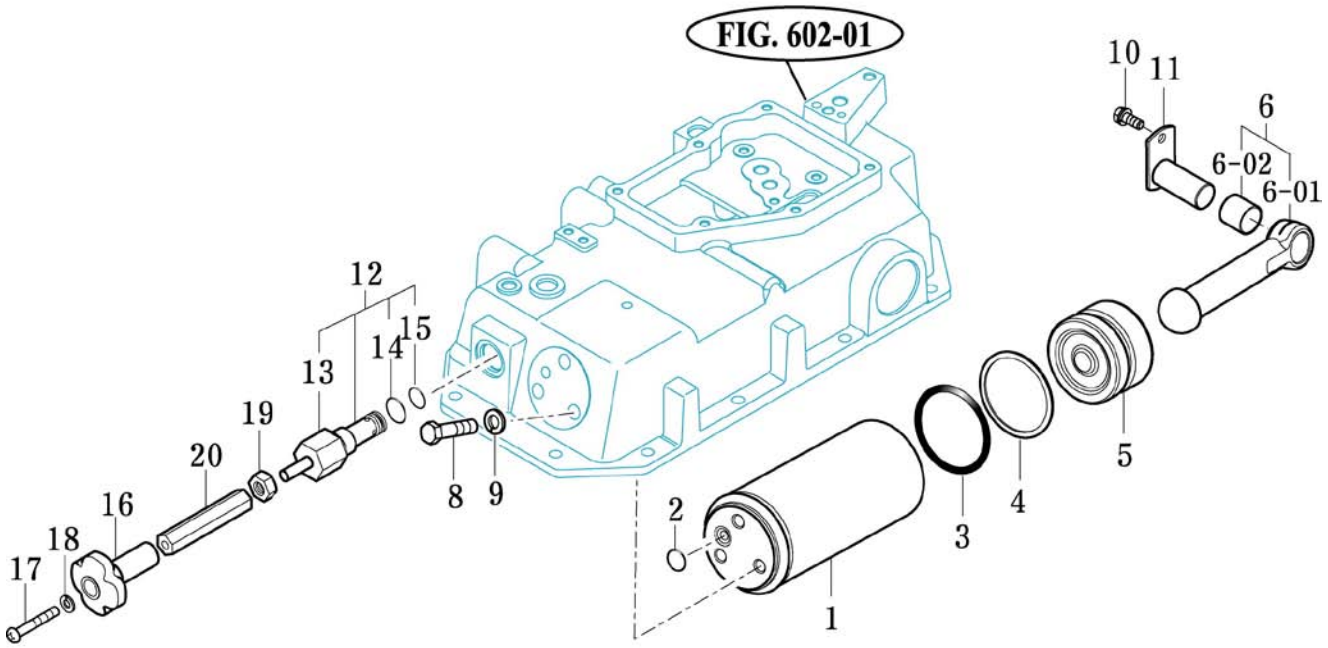

T303/353NC-E-604

NOTE

FIG 604 T300NC / T350NC	CYLINDER	P1	Year / Month 2008 / 12	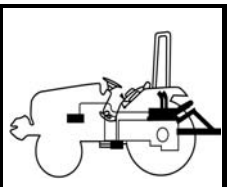

KEY NO.	PART NO.	DESCRIPSTION	SPEC.	QTY.	REPAIR	EFFECTIVE DATE	REMARKS
604 001	16705022300M	CYLINDER COMP		1			
604 002	V7201024014	O-RING , P	P14	1			
604 003	V7201057070	O-RING , P	P70	2			
604 004	16705050060	RING		2			
604 005	16705030050M	PISTON , HYD		1			
604 006	17995031000	ROD ASSY , PISTON		1			
604 00601	17995030061M	.ROD , PISTON		1			
604 00602	17995030070	.BUSH		1			
604 008	V2024612050	BOLT , HEX FINE	M12X50	3			
604 009	V4011600120	WASHER , SPRING	M12	3			
604 010	V2173608016	BOLT , HEX/S	M8X16	1			
604 011	17995031500	PIN COMP , HYD		1			
604 012	15640040000	VALVE , SUB FLOW CONTROL		1	C		
604 013	K2310040070	SEAL , DUST	DKI11217	1			
604 014	V7201124022	O-RING , P	P22	1	B		
604 015	V7201124016	O-RING , P	P16	1	B		
604 016	15605070070	KNOB , SLOW RETURN		1			
604 017	V1112606040	SCREW , C/R PAN	M6X40	1			
604 018	V4011600060	WASHER , SPRING	M6	1			
604 019	V3042600100	NUT , HEX/2	M10	1			
604 020	16705030030	SHAFT , SLOW RETURN(76)		1			

NOTE	

FIG 605 T300/350NC	POSITION LINK (1)	P1	Year / Month 2008/ 12	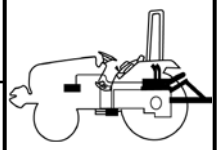

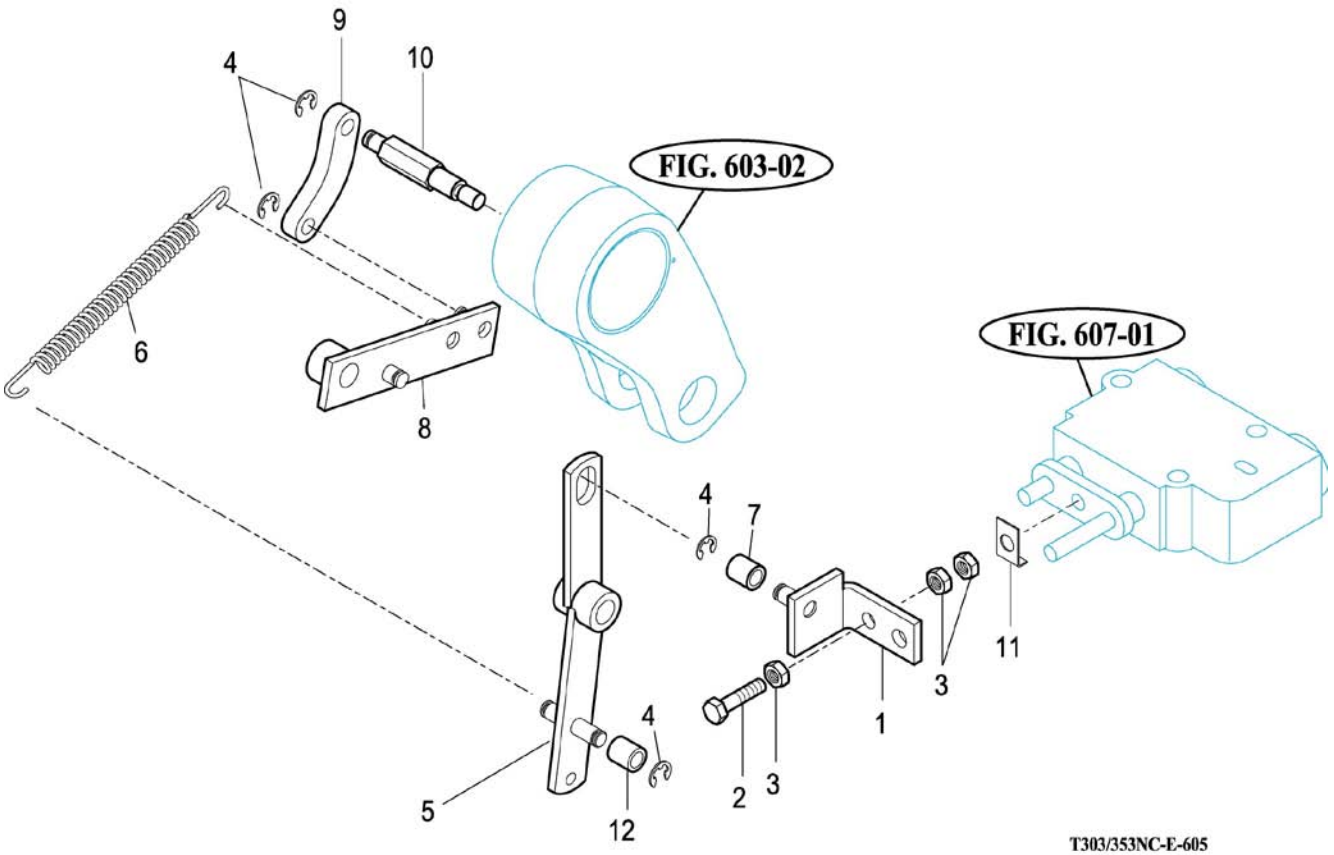

NOTE	

FIG 605 T300NC / T350NC	POSITION LINK (1)	P1	Year / Month 2008 / 12	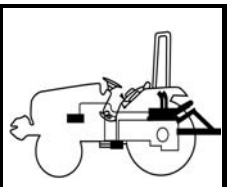

KEY NO.	PART NO.	DESCRIPSTION	SPEC.	QTY.	REPAIR	EFFECTIVE DATE	REMARKS
605 001	16705022200	CLEVIS COMP		1			
605 002	V2013608050	BOLT , HEX	M8X50	1			
605 003	V3043600080	NUT , HEX/2	M8	3			
605 004	V7081400060	E-RING	6	4			
605 005	17995041100	LINK COMP , VALVE		1			
605 006	17995040121	SPRING		1			
605 007	17995040130	ROLLER		1			
605 008	17995041400	ARM , COMP , LINK		1			
605 009	17995040150	LINK , CRANK LIFT		1			
605 010	17995040160	PIN , LINK		1			
605 011	17995040170	WASHER , LOCK		1			
605 012	17995040140	ROLLER		1			

NOTE	

FIG 606 T300/350NC	POSITION LINK (2)	P1	Year / Month 2008/ 12	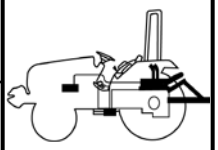

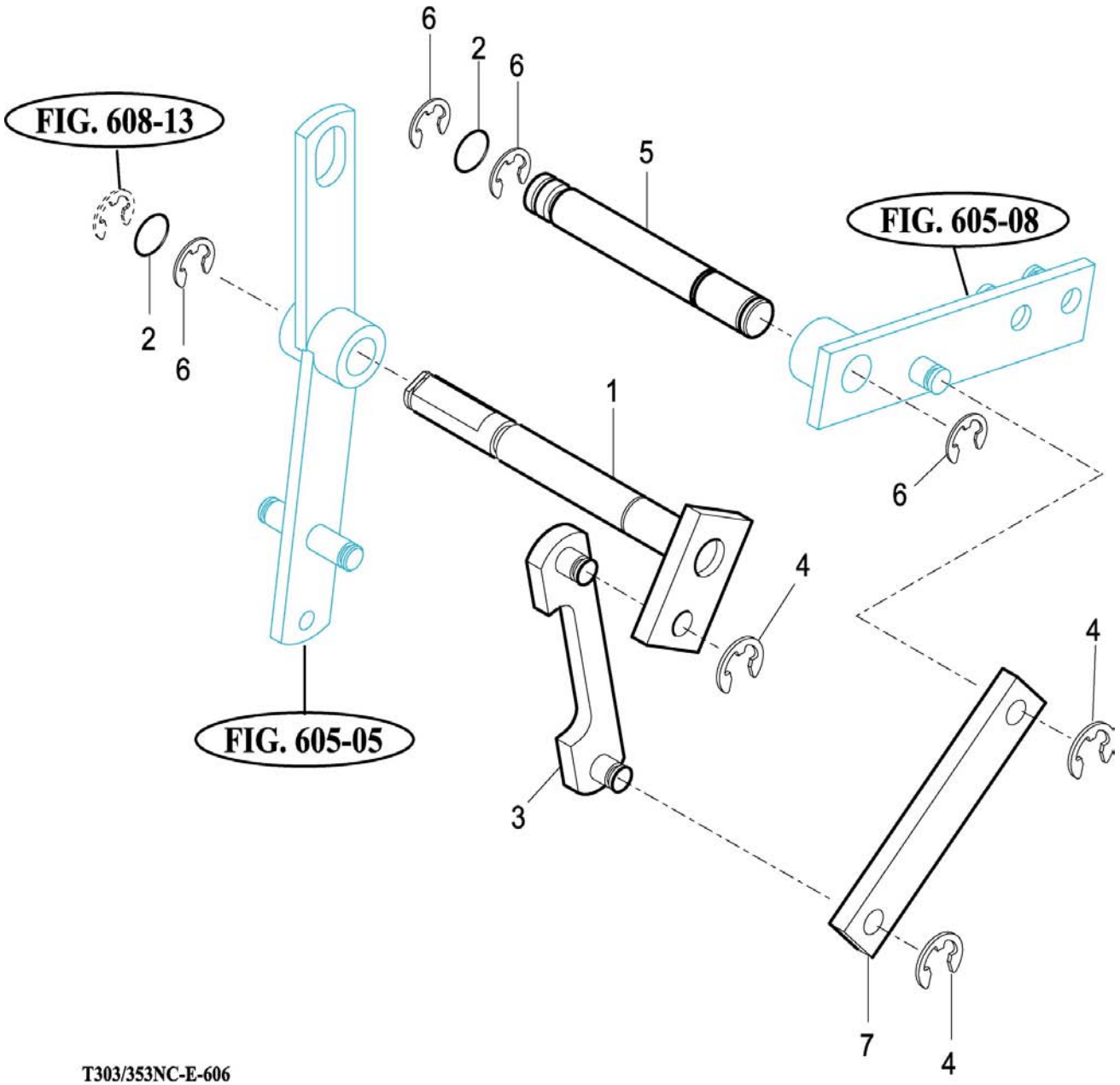

NOTE	

FIG 606 T300NC / T350NC	POSITION LINK (2)	P1	Year / Month 2008 / 12	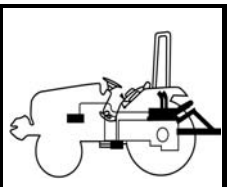

KEY NO.		PART NO.	DESCRIPSTION	SPEC.	QTY.	REPAIR	EFFECTIVE DATE	REMARKS
606	001	16705011201	SHAFT , COMP , POSITION		1			
606	002	V7201019009	O-RING , P	P9	2	B		
606	003	17995060050	LINK COMP , B		1			
606	004	V7081400060	E-RING	6	3			
606	005	16705010030	SHAFT , DRAFT		1			
606	006	V7081400090	E-RING	8	4			
606	007	17995060061	LINK		1			

NOTE	

FIG 607 T300/350NC	CONTROL VALVE	P1	Year / Month 2008/ 12	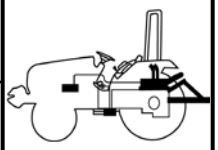

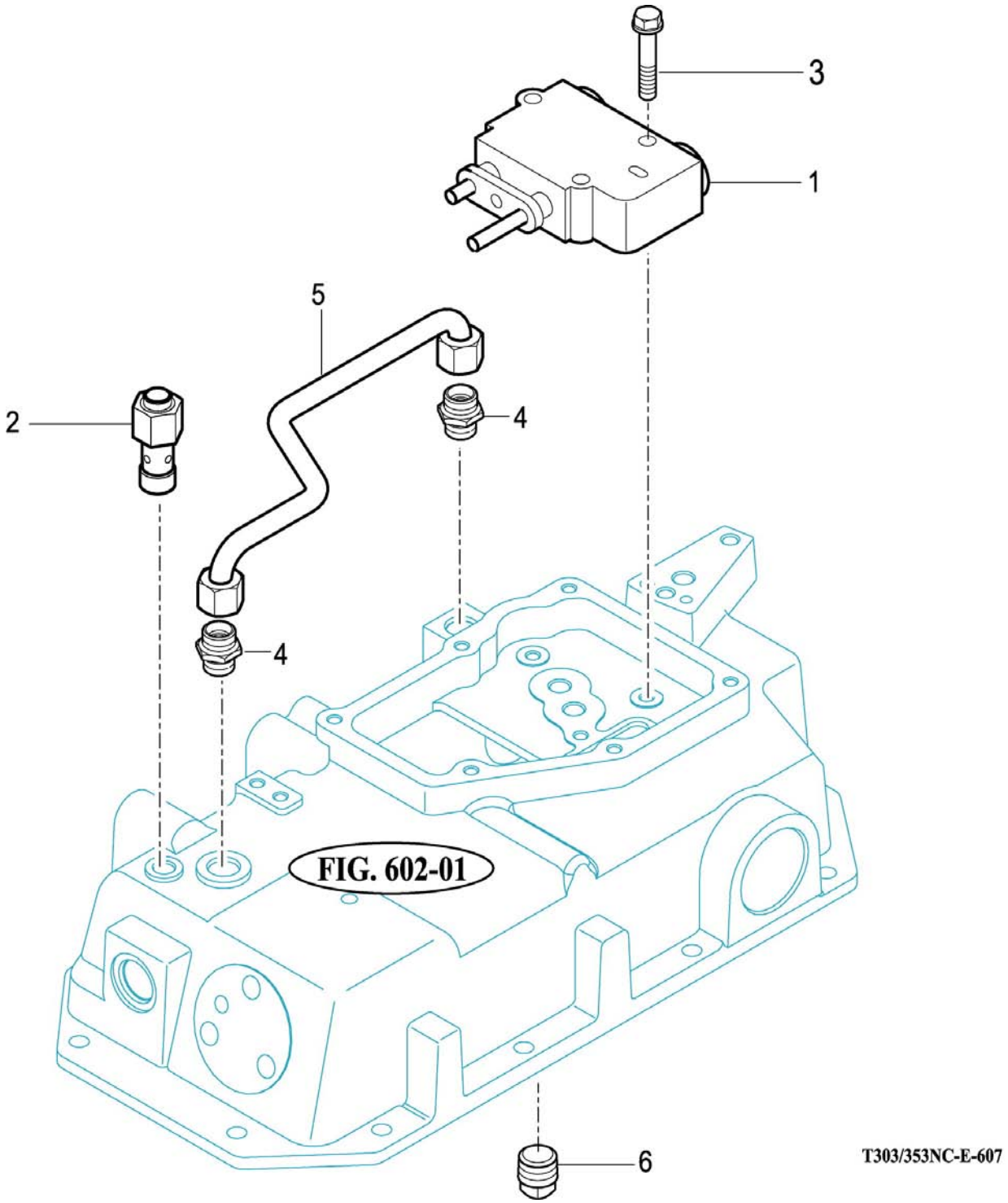

NOTE	

FIG 607 T300NC / T350NC	CONTROL VALVE	P1	Year / Month 2008 / 12	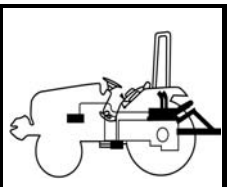

KEY NO.		PART NO.	DESCRIPSTION	SPEC.	QTY.	REPAIR	EFFECTIVE DATE	REMARKS
607	001	17995050100	VALVE ASSY , MAIN CONTROL		1	C		
607	002	16700070000	VALVE ASSY , RELIEF		1	C		
607	003	V2173608045	BOLT , HEX/S	M8X45	3			
607	004	16705060060	UNION		2			
607	005	16705062400	PIPE , CYLINDER COMP		1			
607	006	V7811600006	PLUG,SQUARE	R3/8	1			

NOTE	

FIG 608 T300/350NC	POSITION LEVER	P1	Year / Month 2008/ 12	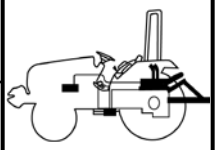

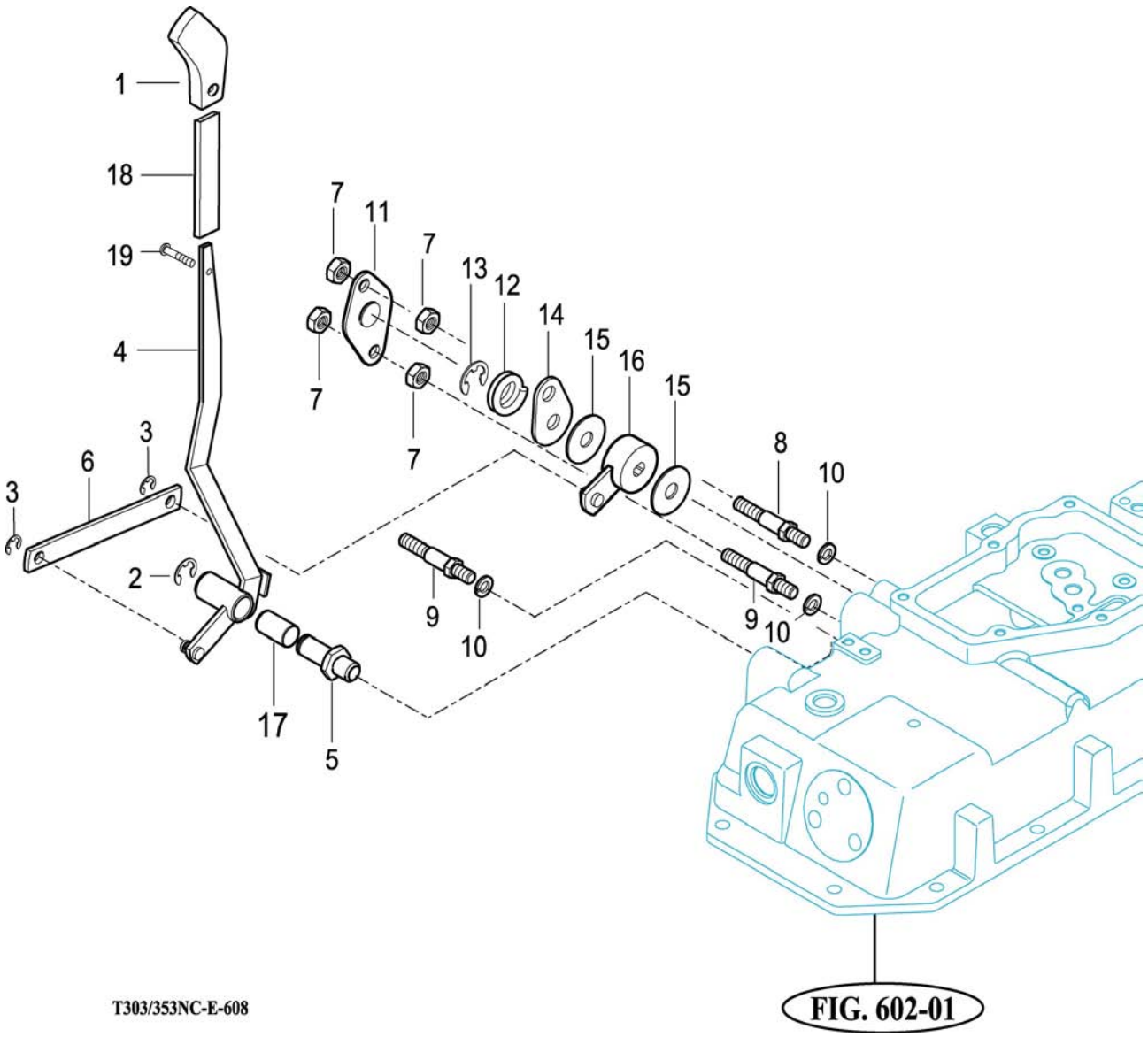

NOTE	

FIG 608 T300NC / T350NC	POSITION LEVER	P1	Year / Month 2008 / 12	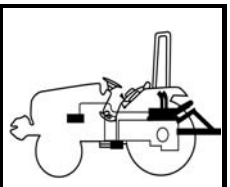

KEY NO.		PART NO.	DESCRIPSTION	SPEC.	QTY.	REPAIR	EFFECTIVE DATE	REMARKS
608	001	15605110054	GRIP , 3X17X97		1			
608	002	V7081400120	E-RING	12	1			
608	003	V7081400080	E-RING	8	2			
608	004	16705062203	LEVER COMP , POSITION		1			
608	005	16705060051	PIN , POSITION		1			
608	006	16705060010	JOINT POSITION		1			
608	007	V3043600100	NUT , HEX/2	M10	4			
608	008	16705060030	BOLT , SUPPORT2		1			
608	009	16705060020	BOLT , SUPPORT1		2			
608	010	V4011600100	WASHER , SPRING	M10	3			
608	011	17995070170	PLATE , D		1			
608	012	17995070180	SPRING		1			
608	013	V7081400090	E-RING	8	1			
608	014	17995070200	PLATE , A		1			
608	015	17995070211	PLATE , FRICTION		2			
608	016	16705062301	ARM , COMP , POSITION		1			
608	017	17995070270	BUSH , 16X18X33		1			
608	018	15603160025	TUBE , STRAIGHT 80		1			
608	019	V1122605012	SCREW , C/R FLAT	M5X12	1			

NOTE	

FIG 609 T300/350NC	HYDRAULIC PIPE (1)	P1	Year / Month 2008/ 12	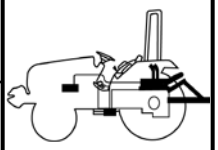

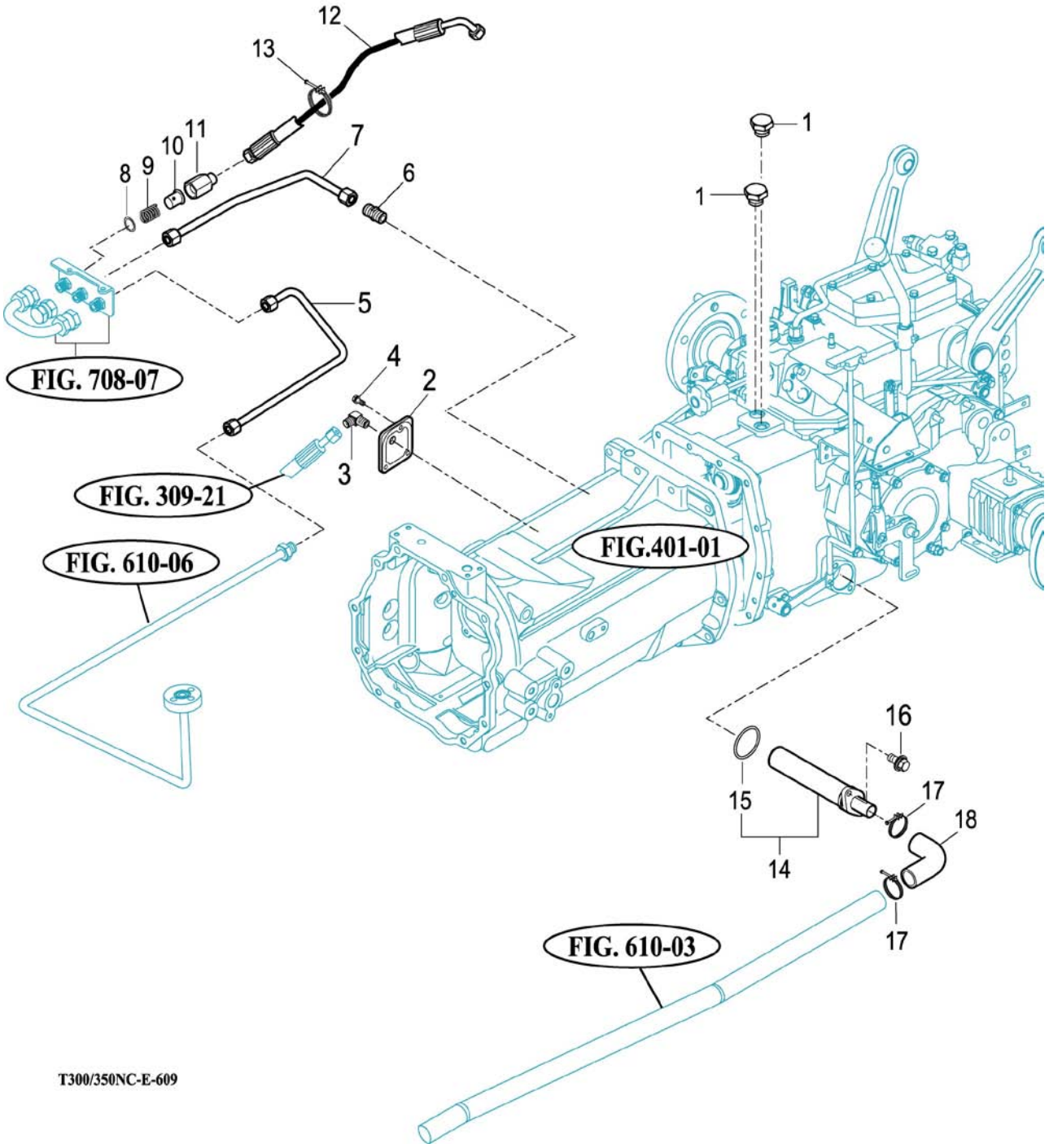

NOTE	

FIG 609 T300NC / T350NC	HYDRAULIC PIPE (1)	P1	Year / Month 2008 / 12	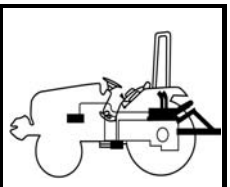

KEY NO.	PART NO.	DESCRIPSTION	SPEC.	QTY.	REPAIR	EFFECTIVE DATE	REMARKS
609 001	17805053300	PLUG ASSY		2			
609 002	13212100050	COVER , FRONT T/M		1	A		
609 003	16751850222	ELBOW , 90 PT3/8		1			
609 004	V2173608020	BOLT , HEX/S		3			
609 005	13215104700	PIPE COMP , DELIVERY REAR		1			
609 006	16994080061	UNION , PT3/8 M18		1			
609 007	16705104500	PIPE COMP , TANK		1			
609 008	V7201024018	O-RING , P	P18	1			
609 009	17995010210	SPRING		1			
609 010	12305180020	FILTER , 80 MESH		1	B		
609 011	16705100030	ADAPTER , PF1/2 PF1/2		1			
609 012	16705152330	HOSE , 1400 ASSY		1	C		
609 013	36527040020	CLAMP . HOSE		1	C		
609 014	16705105000	FILTER ASSY , SUCTION		1			
609 015	V7211031045	O-RING , G	G45	1	B		
609 016	V2183610025	BOLT , HEX/SP	M10X25	2			
609 017	14445100080	CLAMP . HOSE		2			
609 018	14725100020	HOSE		1			

NOTE	

FIG 610 T300/350NC	HYDRAULIC PIPE (2)	P1	Year / Month 2008/ 12	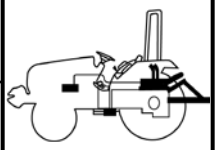

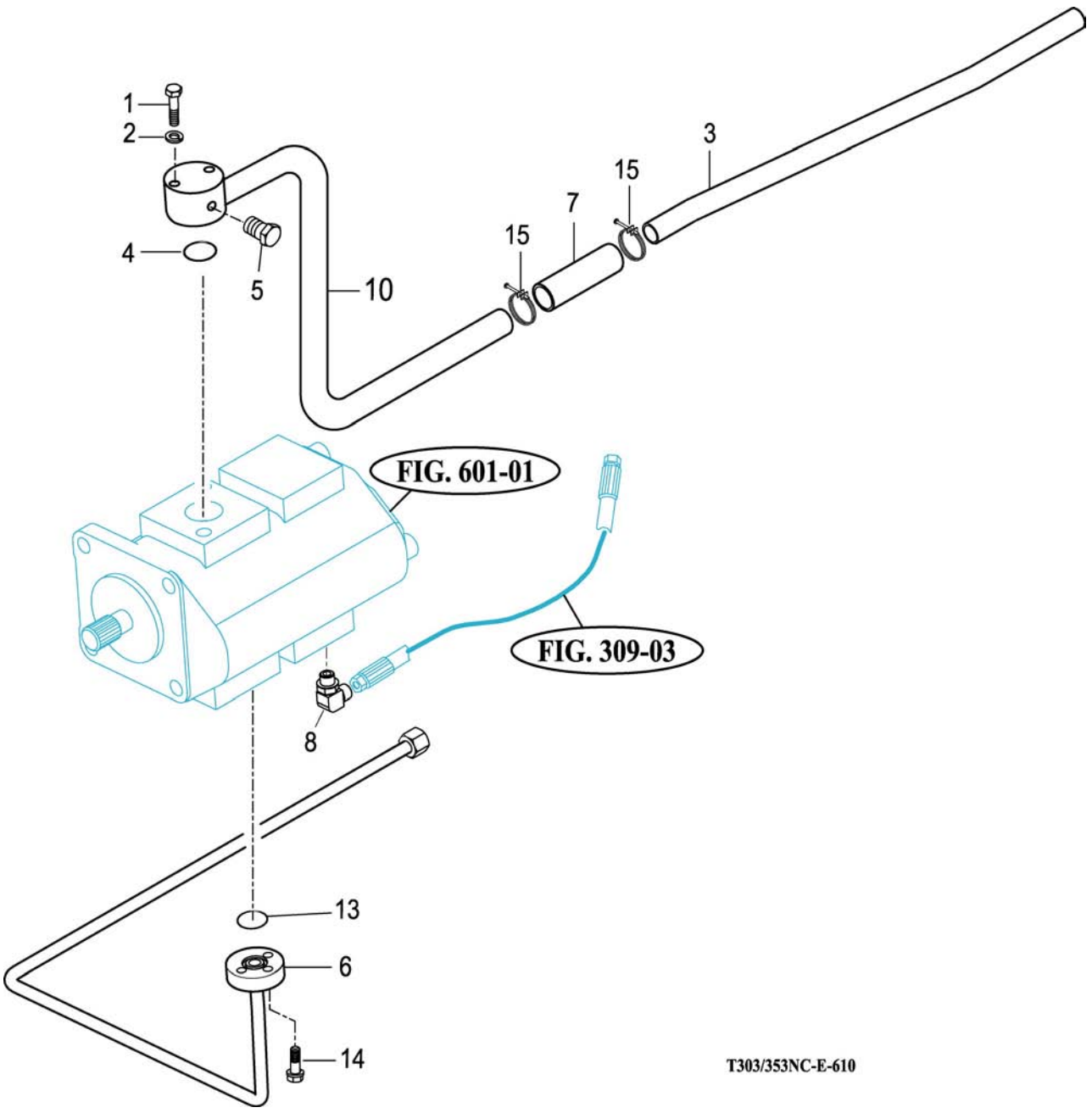

NOTE

FIG 610 T300NC / T350NC	HYDRAULIC PIPE (2)	P1	Year / Month 2008 / 12	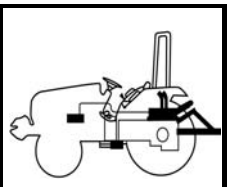

KEY NO.	PART NO.	DESCRIPSTION	SPEC.	QTY.	REPAIR	EFFECTIVE DATE	REMARKS
610 001	V2013608050	BOLT , HEX	M8X50	2			
610 002	V4011600080	WASHER , SPRING	M8	2			
610 003	14945100021GB	PIPE ,FR SCUCTION (PNT)		1			
610 004	V7201124022	O-RING , P	P22	1	B		
610 005	13267060022	PLUG , DRAIN		1			
610 006	14945104103GB	PIPE COMP , FR DELIVERY		1			
610 007	14575100010	HOSE , 26X34X100		1			
610 008	36313530021	ADAPTER , HIGH-PRESSURE		1			
610 010	14945102302GB	PIPE COMP , PUMP		1			
610 013	V7201124020	O-RING , P	P20	1	B		
610 014	V2173608030	BOLT . HEX /S	M8X30	3			
610 015	14445100080	CLAMP . HOSE		2			

NOTE	

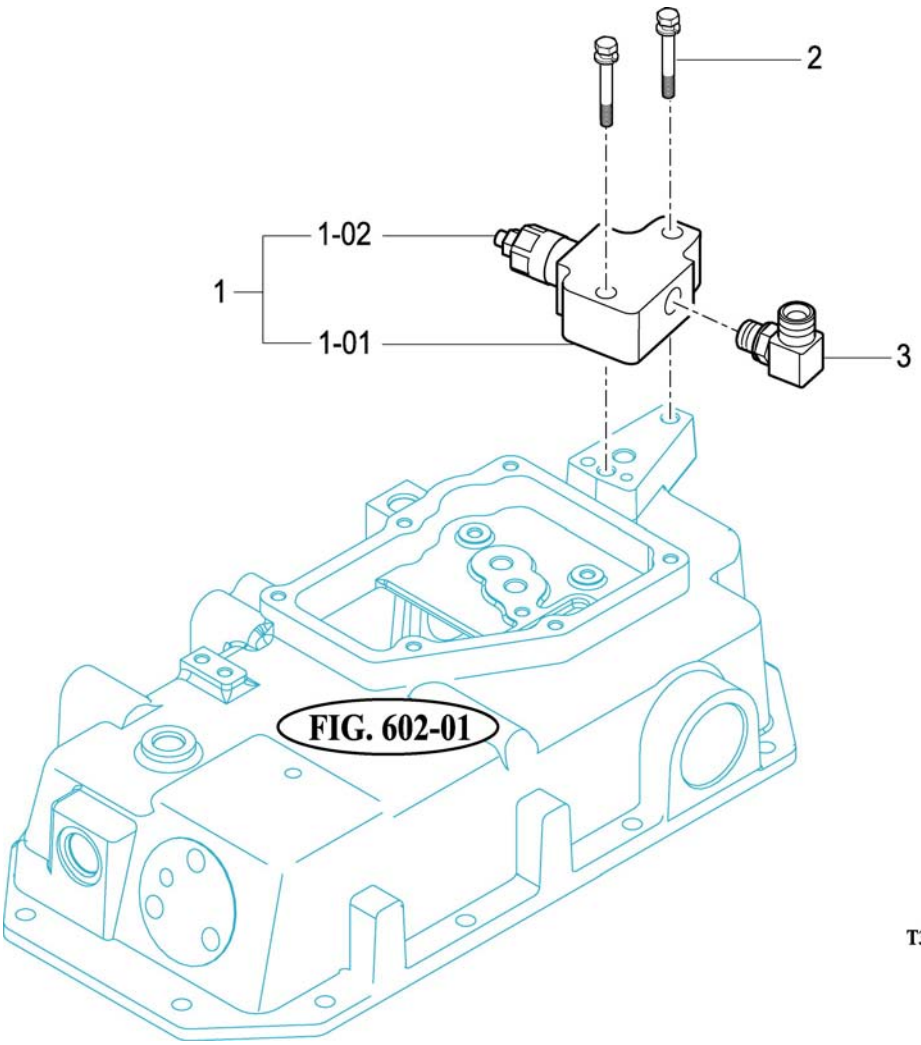

NOTE

FIG 611 T300NC / T350NC	EXTERIOR HYD. VALVE	P1	Year / Month 2008 / 12	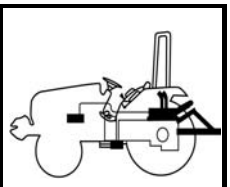

KEY NO.		PART NO.	DESCRIPSTION	SPEC.	QTY.	REPAIR	EFFECTIVE DATE	REMARKS
611	001	13215082000	COVER ASSY,RELIEF V/V		1			
611	00101	13215082200	RELIEF V/V ASSY		1			
611	00102	13215082010	BODY		1			
611	002	V2174610050	BOLT , HEX/S		2			
611	003	17407362300	ELBOW , PF3/8 PF1/2		1			

NOTE	

FIG 612 T300/350NC	3-POINT LINK	P1	Year / Month 2008/ 12	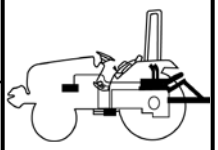

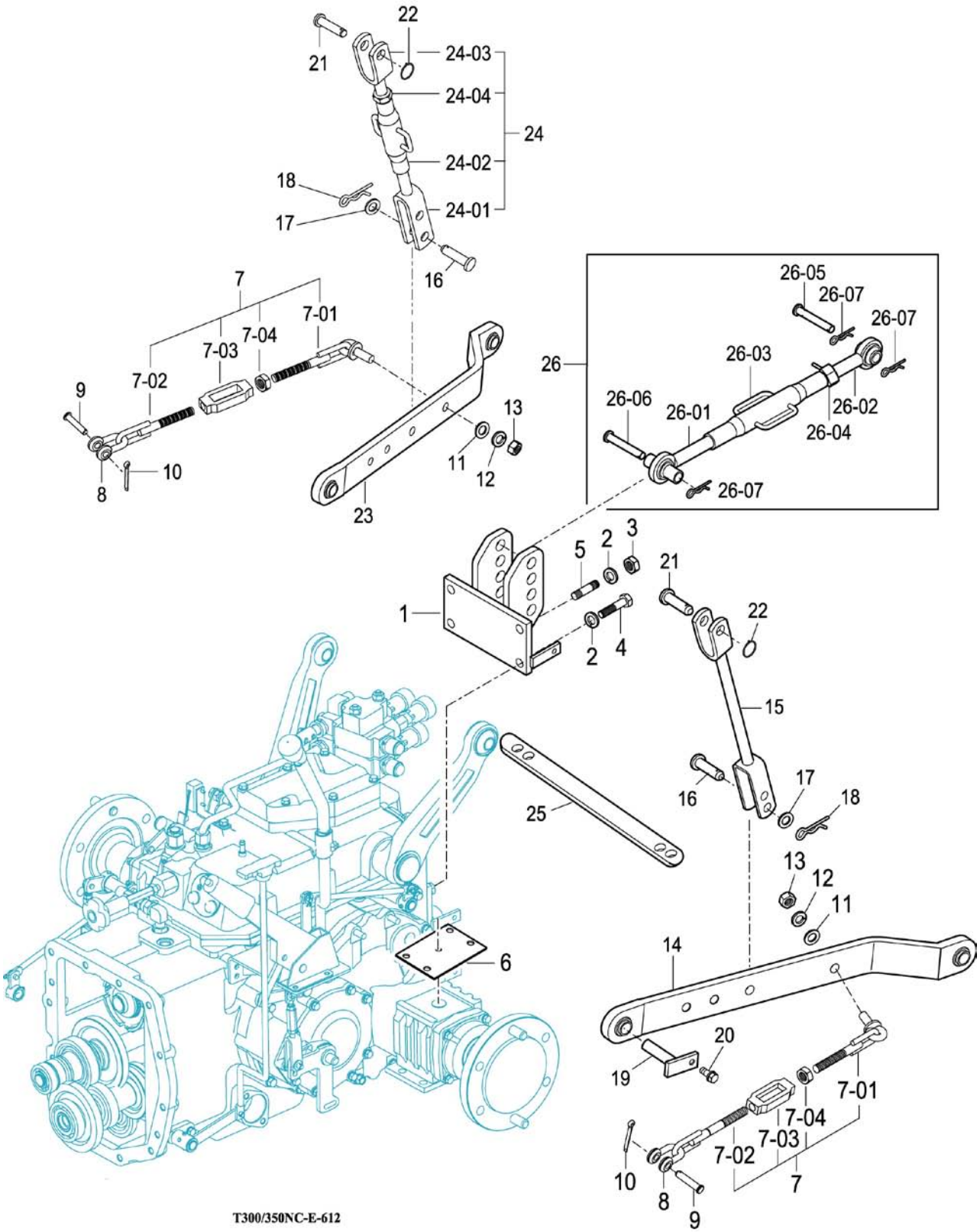

T300/350NC-E-612

NOTE

FIG 612 T300NC / T350NC	3-POINT LINK	P1	Year / Month 2008 / 12	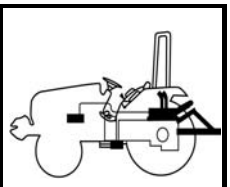

KEY NO.	PART NO.	DESCRIPSTION	SPEC.	QTY.	REPAIR	EFFECTIVE DATE	REMARKS
612 001	16703172002GB	BRACKET COMP , TOP LINK		1			
612 002	V4011600140	WASHER , SPRING	M14	4			
612 003	V3043600140	NUT , HEX/2	M14	2			
612 004	V2014614035	BOLT , HEX/S		2			
612 005	V2514414028	STUD , BOLT		2			
612 006	13017020040	PLATE , W/O ROPS		2			
612 007	16705142501	CHAIN ASSY , CHECK		2			
612 00701	16505244100	CHAIN COMP , LH CHECK		2			
612 00702	16705142800	CHAIN COMP , RH/CHECK		2			
612 00703	16705142510M	TURNBUCKLE		2			
612 00704	V3043600140	NUT , HEX/2	M14	2			
612 008	16705142520	SHACKLE , CHECK CHAIN		2			
612 009	79636110030	PIN , 12X48		2			
612 010	V5001930020	PIN , SPLIT	3X20	4			
612 011	V4111600160	WASHER , PLAIN	M16	2			
612 012	V4011600160	WASHER , SPRING	M16	2			
612 013	V3013600160	NUT , HEX/2	M16	2			
612 014	16705142001GB	LINK COMP , LH LOW		1			
612 015	16705142400GB	ROD COMP , LH LIFT		1			
612 016	79636130050	PIN , 16X60		2			
612 017	V4111600160	WASHER , PLAIN	M16	2			
612 018	13059310030	PIN		2			
612 019	16705140021	PIN COMP , LOWER LINK		2			
612 020	V2173608020	BOLT , HEX/S	M8X20	2			
612 021	16705020050	PIN , 19X69		2			
612 022	16735240060	SPRING		2			
612 023	16705142101GB	LINK COMP , RH LOW		1			
612 024	16705145000GB	ROD ASSY , RH LIFT		1			
612 02401	16705145200	FORK COMP , LOW		1			
612 02402	16705145100	SLIP COMP		1			
612 02403	16705145300	FORK COMP , UPR		1			
612 02404	V3003600200	NUT , HEX NORMAL /1		1			
612 025	15605250030	BAND , 470		1	C		
612 026	16505245500GB	LINK ASSY , TOP		1			
612 02601	16505245510	LINK COMP , RH TOP LINK		1			
612 02602	16505245520	LINK COMP , LH TOP LINK		1			
612 02603	14555140250	TURNBUCKLE COMP		1			
612 02604	16505245530	NUT , HEX/3		1			
612 02605	15645220020	PIN , TOP LINK		1			
612 02606	15645220011	PIN , 19X86		1			
612 02607	14445140051	PIN , 19		3			

NOTE	

FIG 613 T300/350NC	HITCH & COVER	P1	Year / Month 2008/ 12	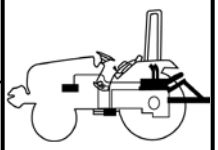

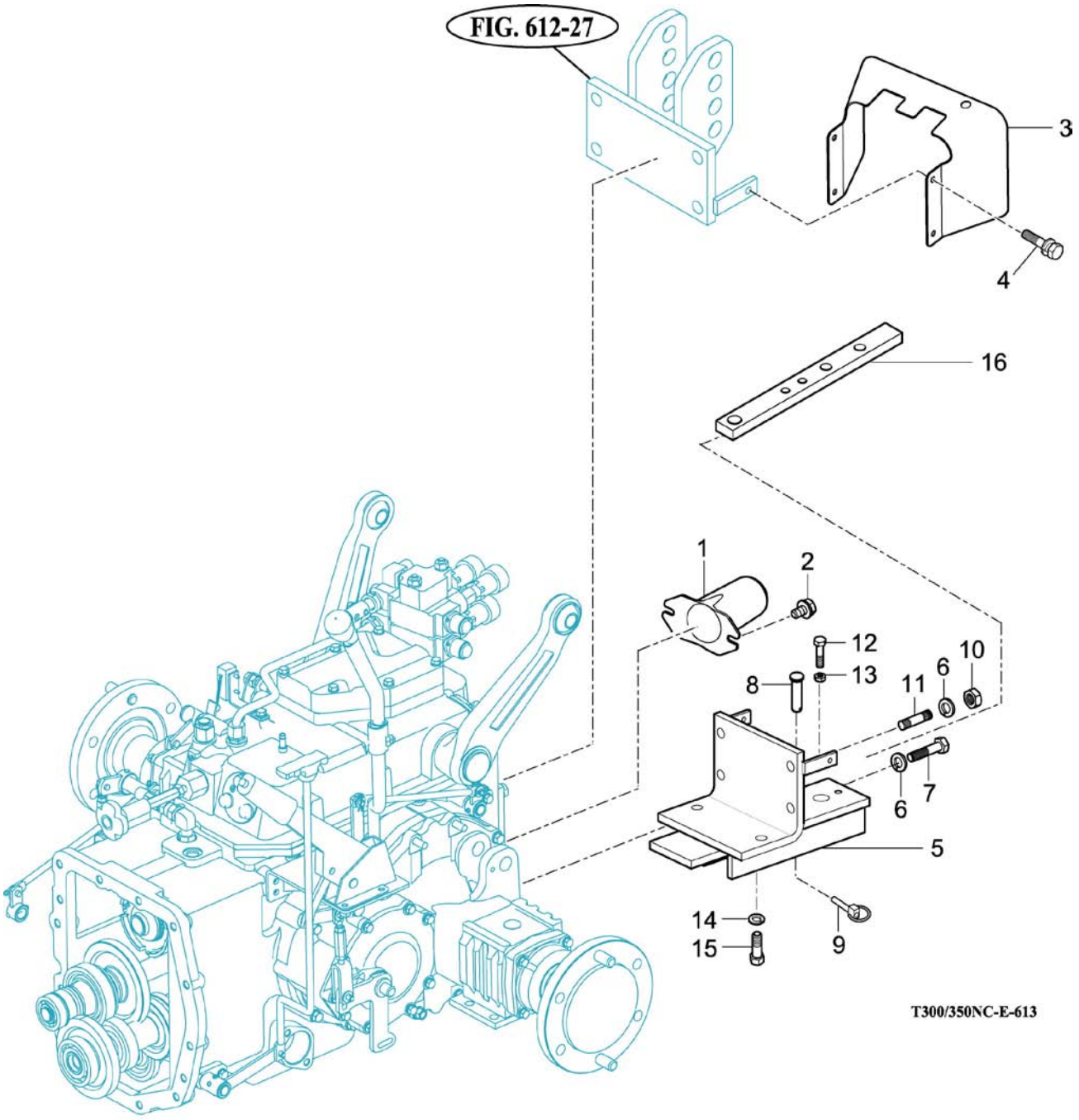

NOTE	

FIG 613 T300NC / T350NC	HITCH & COVER	P1	Year / Month 2008 / 12	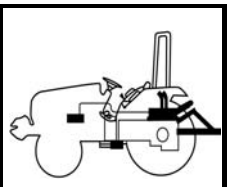

KEY NO.	PART NO.	DESCRIPSTION	SPEC.	QTY.	REPAIR	EFFECTIVE DATE	REMARKS
613 001	14443140091	CAP , PTO SHAFT		1	C		
613 002	V2183608016	BOLT , HEX/SP	M8X16	2			
613 003	13605200011GB	COVER , SHIELD		1			
613 004	V2173608016	BOLT , HEX/S	M8X16	4			
613 005	13213172200GB	DRAWBAR BRACKET COMP		1			
613 006	V4011600140	WASHER , SPRING	M14	4			
613 007	V2014614035	BOLT , HEX	M14X35	2			
613 008	14725200021	PIN , 22X82		1			
613 009	14215020020	PIN , LINK		2			
613 010	V3043600140	NUT , HEX/2	M14	2			
613 011	V2514414028	STUD , BOLT	M14X28	2			
613 012	V2013610030	BOLT , HEX	M10X30	1			
613 013	V3043600100	NUT , HEX/2	M10X30	1			
613 014	V4011600140	WASHER , SPRING	M14	2			
613 015	V2014614035	BOLT , HEX	M14X35	2			
613 016	14725200010GB	BAR , DRAW		1			

NOTE	

FIG 701 T300/T350NC	HOOD (1)	P1	Year / Month 2008 / 12	

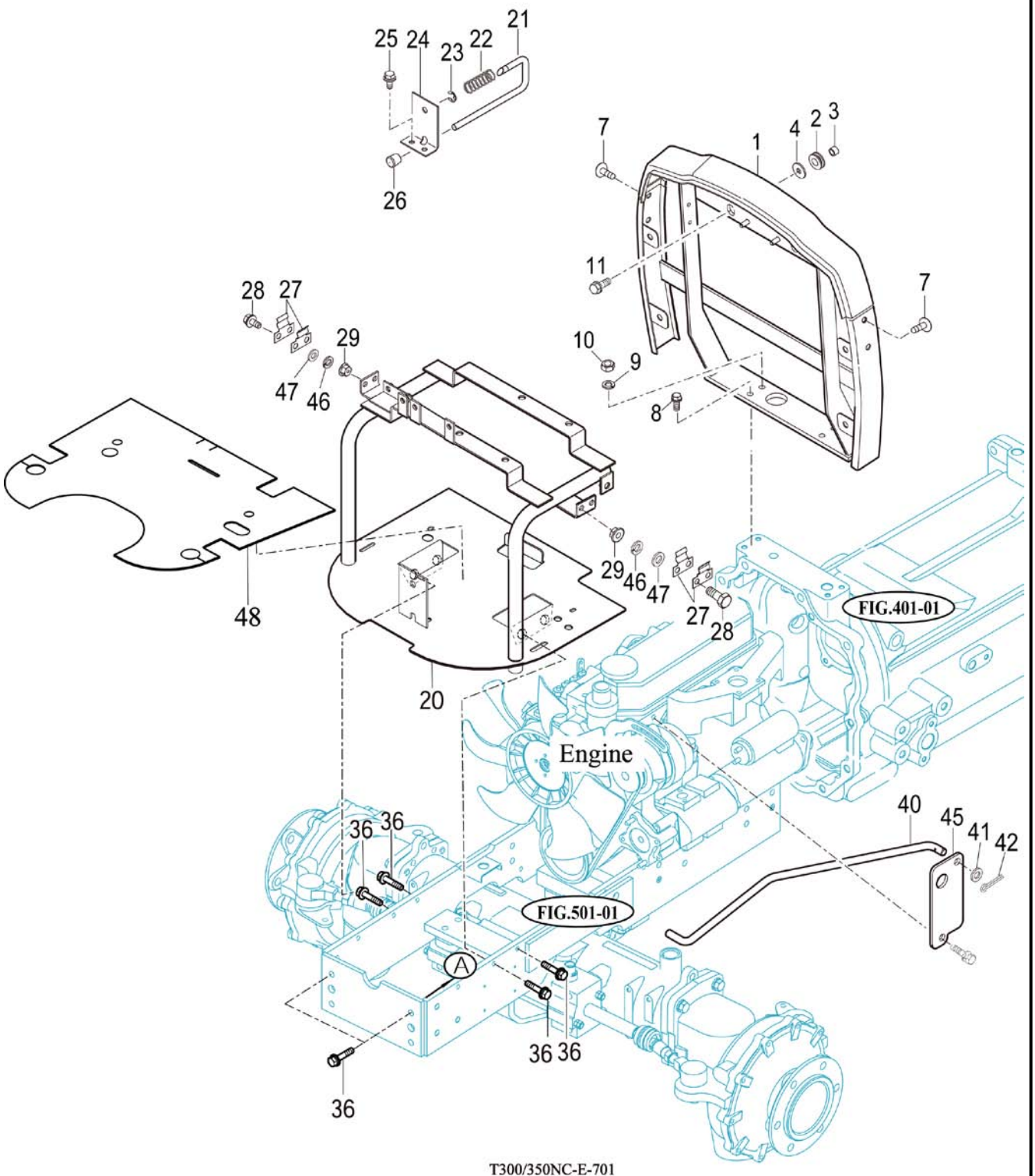

NOTE	

FIG 701 T300NC / T350NC	HOOD (1)	P1	Year / Month 2008 / 12	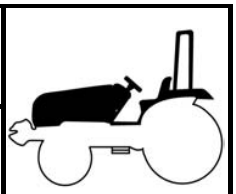

KEY NO.	PART NO.	DESCRIPSTION	SPEC.	QTY.	REPAIR	EFFECTIVE DATE	REMARKS
701 001	16706022101GB	FRAME COMP , HOOD		1			
701 002	14046210300	GROMMET		2			
701 003	14726310050	COLLAR , 08X12X15		2			
701 004	35602010150	WASHER , BIND SHAFT		2			
701 007	15276040020	CLIP , TRIM		4			
701 008	V2173610025	BOLT , HEX/S	M10X25	2			
701 009	V4011600100	WASHER , SPRING	M10	2			
701 010	V3003600100	NUT , HEX/1	M10	2			
701 011	V2173608025	BOLT , HEX/S	M8X25	2			
701 020	14721122006GB	BRACKET COMP , BATTERY		1			
701 021	14721120071	PIN , HOOD LOCK		1			
701 022	14726010020	SPRING , HOOD LOCK		1			
701 023	V7081400080	E-RING	8	1			
701 024	14721120080GB	PLATE , HOOD LOCK		1			
701 025	V2183608020	BOLT , HEX/SP	M8X20	2			
701 026	14721120090	GRIP , HOOD LOCK		1			
701 027	15606040227	SPRING		4			
701 028	V2183608020	BOLT , HEX/SP	M8X20	4			
701 029	V3043600080	NUT , HEX/2	M8	4			
701 036	V2183608030	BOLT , HEX/SP	M8X30	6			
701 040	14946020680	STAY, HOOD		1			
701 041	V4111600100	WASHER , PLAIN	M10	1			
701 042	V5001920020	PIN , SPLIT	2X20	1			
701 045	14946020020GB	BRACKET,SUPPORT,ENGINE		1			
701 046	V4011600080	WASHER , SPRING	M8	4			
701 047	V4111600080	WASHER , PLAIN	M8	4			
701 048	13211110010	SEAL,BATTERY		1			

NOTE	

FIG 702 T300/T350NC	HOOD (2)	P1	Year / Month 2008 / 12	

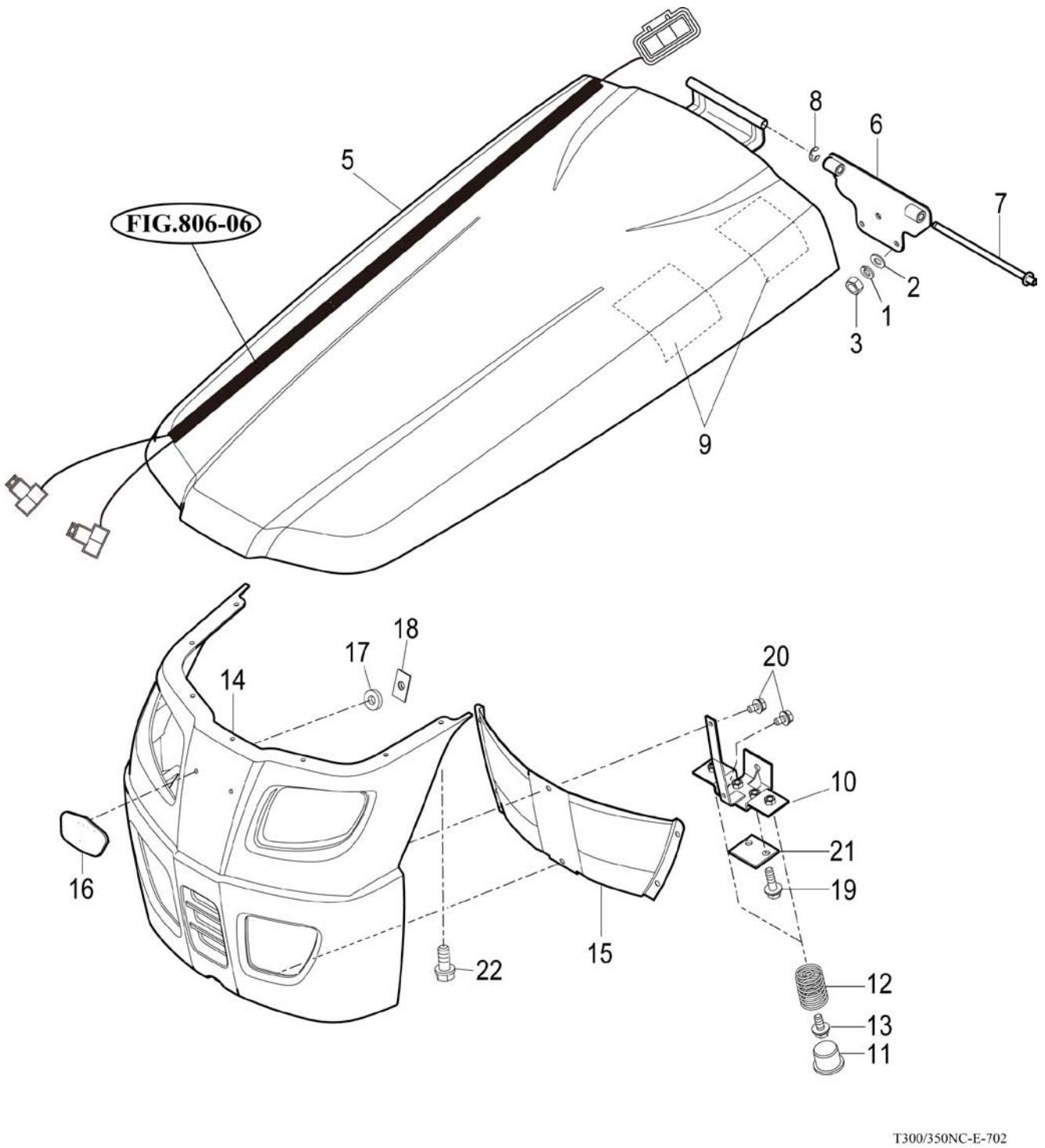

NOTE

FIG 702 T300NC / T350NC	HOOD (2)	P1	Year / Month 2008 / 12	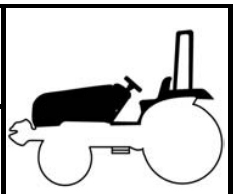

KEY NO.		PART NO.	DESCRIPSTION	SPEC.	QTY.	REPAIR	EFFECTIVE DATE	REMARKS
702	001	V4011600080	WASHER , SPRING	M8	2			
702	002	V4111600080	WASHER , PLAIN	M8	2			
702	003	V3043600080	NUT , HEX/2	M8	2			
702	005	14726012000SR	HOOD COMP		1			
702	006	14726054602GB	PLATE COMP , HOOD HINGE		1			
702	007	14726020030	PIN , HOOD		1			
702	008	V7081400080	E-RING	8	1			
702	009	16506010140	SPONGE		2			
702	010	14726016003	STAY COMP , GRILL		1			
702	011	14726110301	CUSHION , RUBBER		2			
702	012	14726010031	SPRING , HOOD CUSHION		2			
702	013	V2183608020	BOLT , HEX/SP	M8X20	2			
702	014	14576010014SR	GRILLE		1			
702	015	14576010020DG	NET		1			
702	016	16506010260	LABEL		1			
702	017	14446010150	WASHER , NET		8			
702	018	V3501600060	NUT , PUSH-ON SPRING	M6	8			
702	019	V2183608030	BOLT , HEX/SP	M8X30	2			
702	020	V2123606012	BOLT , HEX /SP	M6X12	2			
702	021	16506011950GB	PLATE		1			
702	022	V2193606016	BOLT , HEX/SPL	M6X16	6			

NOTE	

FIG 703 T300/T350NC	SIDE COVER	P2	Year / Month 2008 / 12	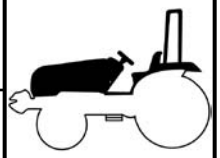

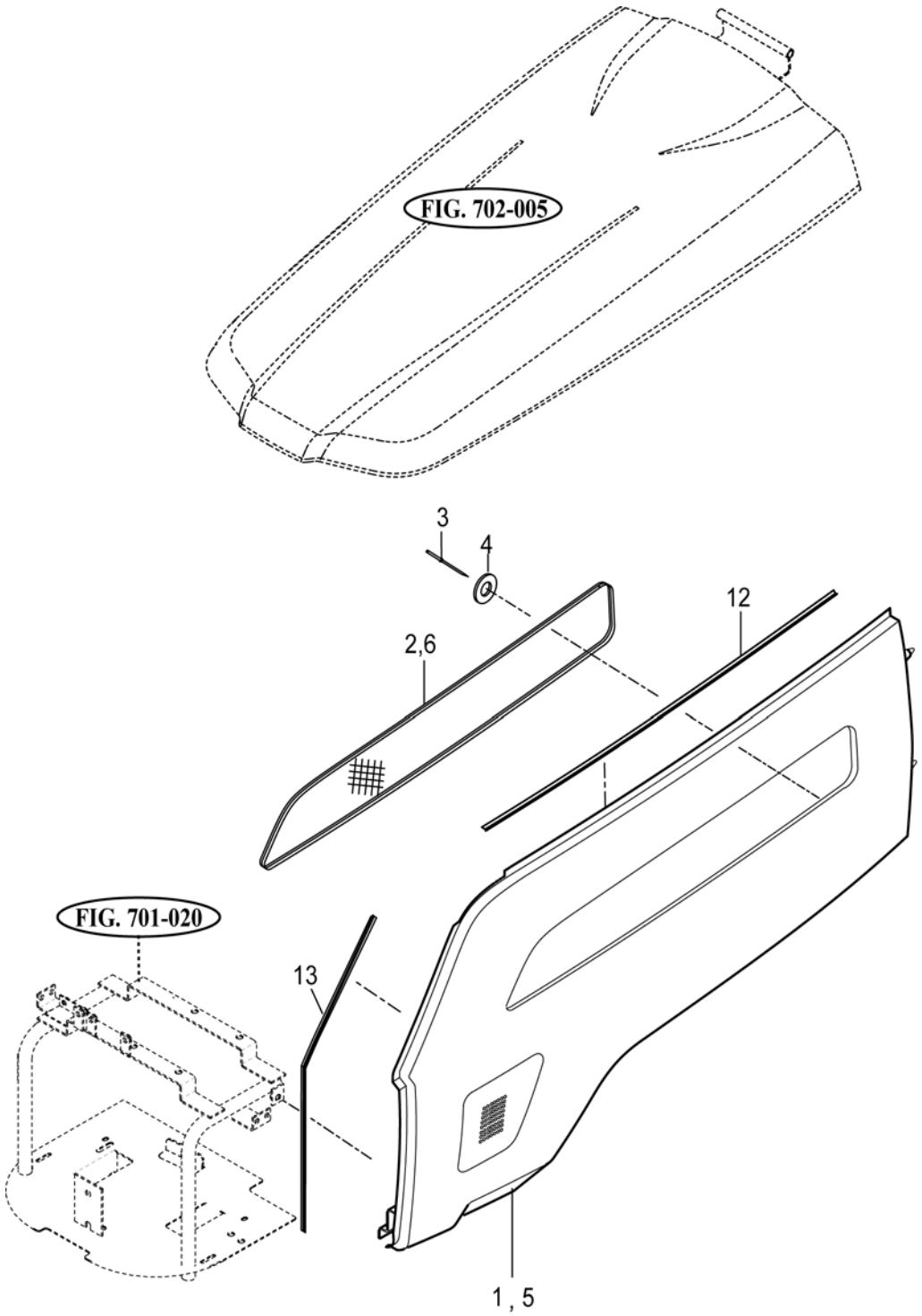

T300/350NC-E-703

NOTE	

FIG 703 T300NC / T350NC	SIDE COVER	P1	Year / Month 2008 / 12	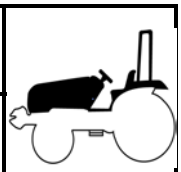

KEY NO.		PART NO.	DESCRIPSTION	SPEC.	QTY.	REPAIR	EFFECTIVE DATE	REMARKS
703	001	14726013001SR	COVER COMP , LH SIDE		1			
703	002	14576013121DG	NET , LH SIDE		1			
703	003	V5502040093	RIVET , BLIND	4X9.3	16			
703	004	V4111600040	WASHER , PLAIN	M4	16			
703	005	14726014001SR	COVER COMP , RH SIDE		1			
703	006	14576014121DG	NET , RH SIDE		1			
703	012	14726010100	INSULATOR , SIDE EDGE A		2			
703	013	14726010200	INSULATOR , SIDE EDGE B		2			

NOTE	

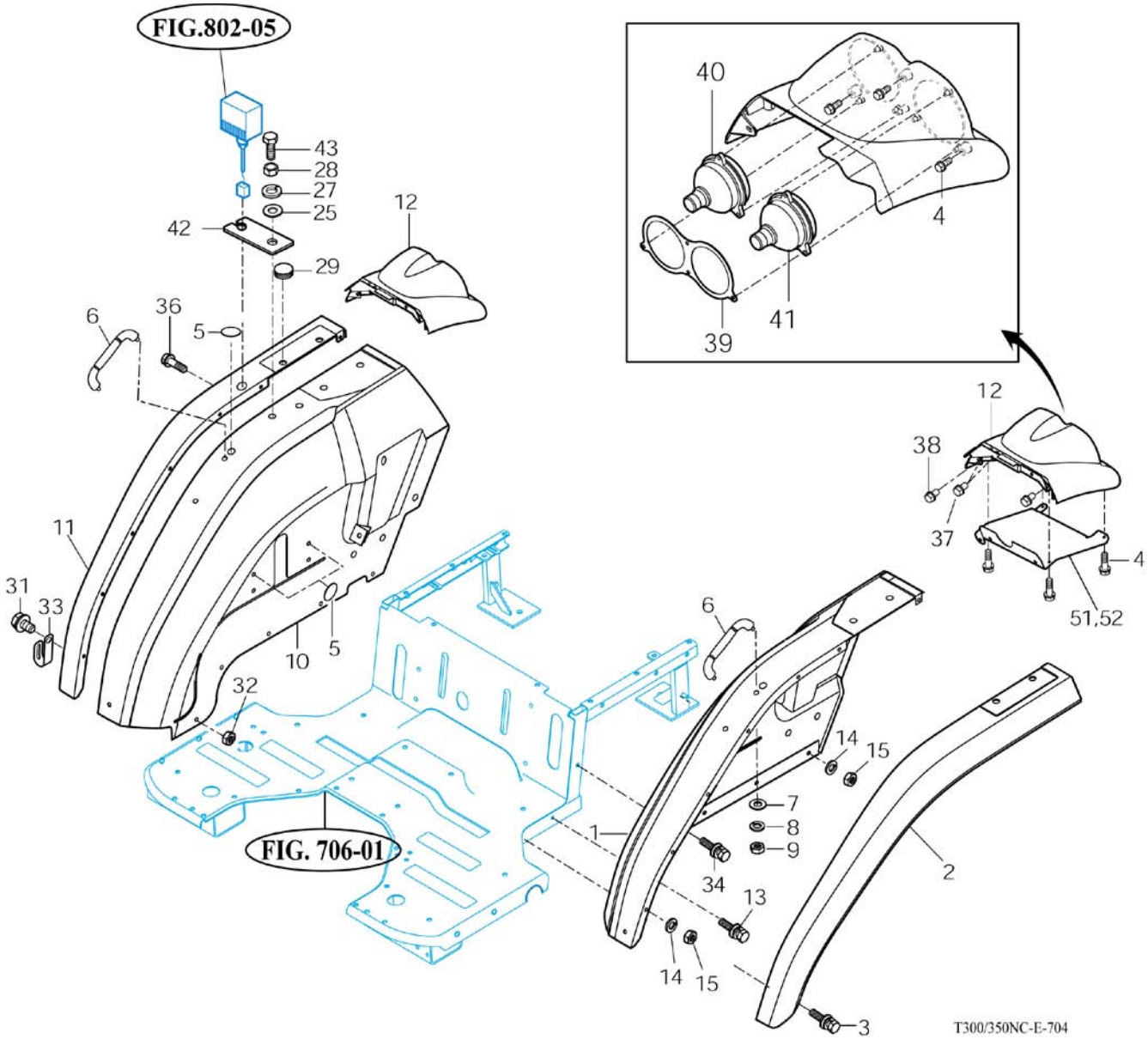
FIG.802-05
43
28
27
25
42
29
12
6
36
5
40
4
41
39
38
37
51,52
11
31
33
10
32
FIG. 706-01
1
14
15
7
8
9
34
13
2
3
T300/350NC-E-704

NOTE

FIG 704 T300NC / T350NC	FENDER & REAR FRAME	P1	Year / Month 2008 / 12	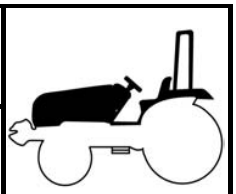

KEY NO.	PART NO.	DESCRIPSTION	SPEC.	QTY.	REPAIR	EFFECTIVE DATE	REMARKS
704 001	16706063502SR	FENDER COMP , LH		1			
704 002	13606060041	FENDER , LH		1			
704 003	V2193606016	BOLT , HEX/SPL	M6X16	12			
704 004	V2123606012	BOLT , HEX /SP	M6X12	14			
704 005	16606070031	CAP , 9		10			
704 006	14726071100	GRIP COMP		2			
704 007	35602010150	WASHER , BIND SHAFT	M8	4			
704 008	V4011600080	WASHER , SPRING	M8	4			
704 009	V3042600080	NUT , HEX/2	M8	4			
704 010	16706063602SR	FENDER COMP , RH		1			
704 011	16306060020	FENDER , RH MUD GUIDE		1			
704 012	13016060020	COVER ,LH RR LAMP		1			
704 013	V2183608020	BOLT , HEX/SP	M8X20	8			
704 014	V4011600080	WASHER , SPRING	M8	4			
704 015	V3042600080	NUT , HEX/2	M8	4			
704 025	V4111600120	WASHER , PLAIN	M12	4			
704 027	V4011600120	WASHER , SPRING	M12	4			
704 028	V3043600120	NUT , HEX/2	M12	4			
704 029	14326510210	CAP , RUBBER 20		4			
704 031	V2193608020	BOLT , HEX /SP	M8X20	1			
704 032	V3042600080	NUT , HEX/2	M8	1			
704 033	14256210040	CLAMP , HARNESS		1	C		
704 034	V2183608035	BOLT , HEX/SP	M8X35	2			
704 036	V2183610020	BOLT , HEX/SP	M10X20	2			
704 037	V2183606016	BOLT , HEX/SP		6			
704 038	V2193606020	BOLT , HEX/SPL		2			
704 039	13016061300	FIX PLATE , RR LAMP		2			
704 040	17687023401	LAMP ASSY . STOP		2			
704 041	14527023300	LAMP ASSY , RR COMBINATION		2			
704 042	13016640010GB	PLATE , LAMP		2			
704 043	V2014612035	BOLT , HEX		2			
704 051	13016062000GB	PLATE COMP , LH RR LAMPCOVER		1			
704 052	13016063000GB	PLATE COMP , RH RR LAMPCOVER		1			
		-NEXT-					

NOTE	

FIG 705 T300/T350NC	DASHPANEL	P1	Year / Month 2008 / 12	

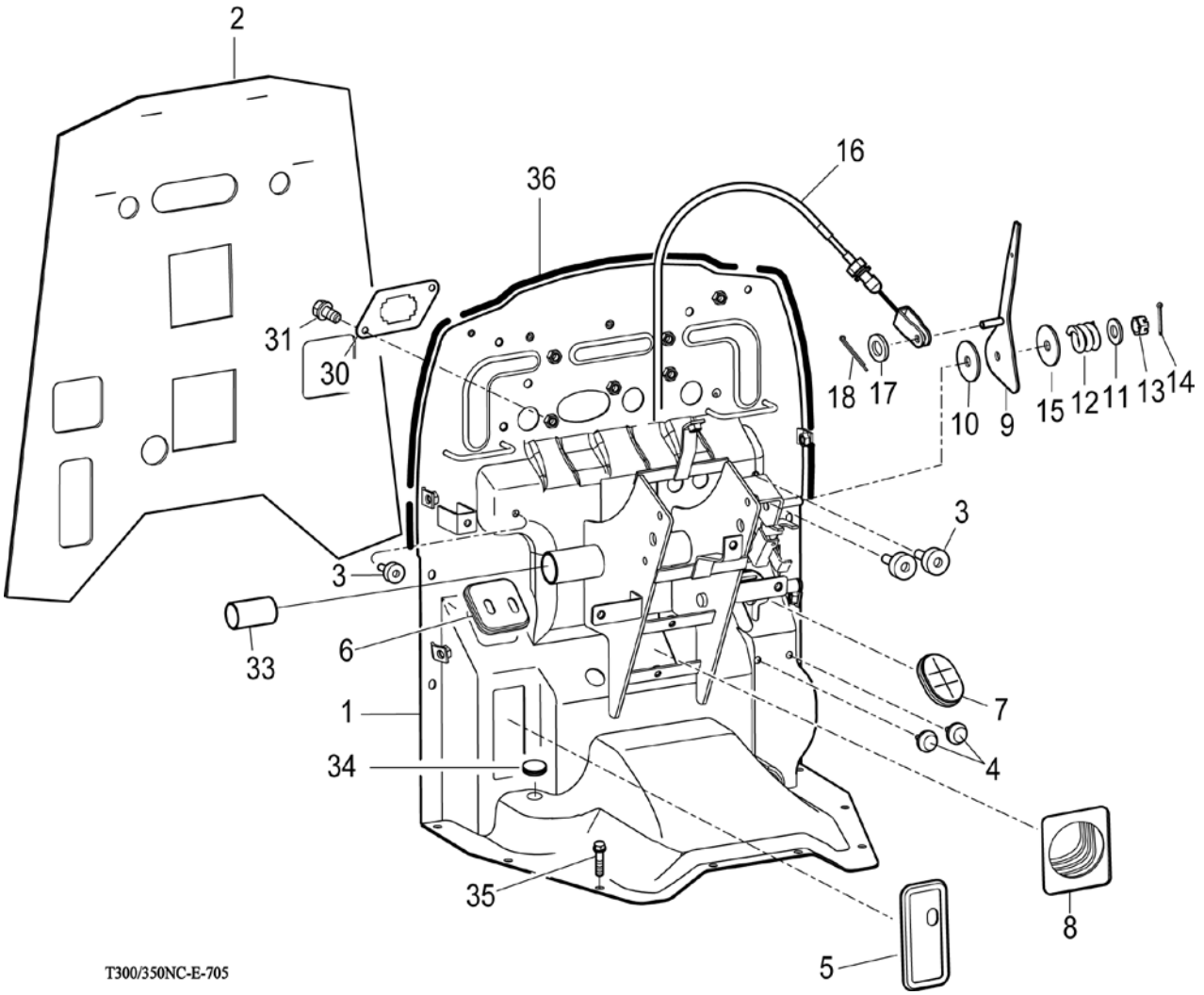

NOTE

FIG 705 T300NC / T350NC	DASHPANEL	P1	Year / Month 2008 / 12	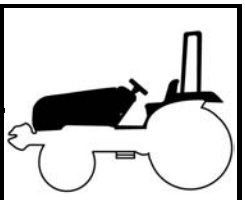

KEY NO.		PART NO.	DESCRIPSTION	SPEC.	QTY.	REPAIR	EFFECTIVE DATE	REMARKS
705	001	13016302000GB	PANEL COMP , DASH		1			
705	002	14946300020	INSULATOR , DASHPANEL		1			
705	003	14216020051	RUBBER , CUSHION B		3			
705	004	14326160020	RUBBER , CUSHION		2			
705	005	16606300021	CAP , 4WD		1			
705	006	16996300200	INSULATOR		1			
705	007	16996300210	INSULATOR		1			
705	008	16756300010	BOOT , STEERING HOSE		1			
705	009	16701162101GB	LEVER COMP , THROTTLE		1			
705	010	14141170050	LINING , 13X50X3		2			
705	011	V4111600100	WASHER , PLAIN	M10	1			
705	012	14041170080	SPRING , COMPRESSION 22		1			
705	013	V3232600100	NUT , HEX SLOT & CASTLE	M10	1			
705	014	V5001925020	PIN , SPLIT	2.5X20	1			
705	015	36104400180	WASHER		1			
705	016	14941162300	CABLE ASSY , THROTTLE 720		1	C		
705	017	V4111600060	WASHER , PLAIN	M6	1			
705	018	V5001920020	PIN , SPLIT	2X20	1			
705	030	14946300031	PLATE , CONNECTOR		1			
705	031	V2173608020	BOLT , HEX/S	M8X20	2			
705	033	36707030080	BUSH , 20X23X20		2			
705	034	16606510210	CAP , RUBBER 30		2			
705	035	V2183608020	BOLT , HEX/SP	M8X20	8			
705	036	17971040551	INSULATOR		3			

NOTE	

FIG 706 T300/T350NC	FLOOR PANEL	P1	Year / Month 2008 / 12	

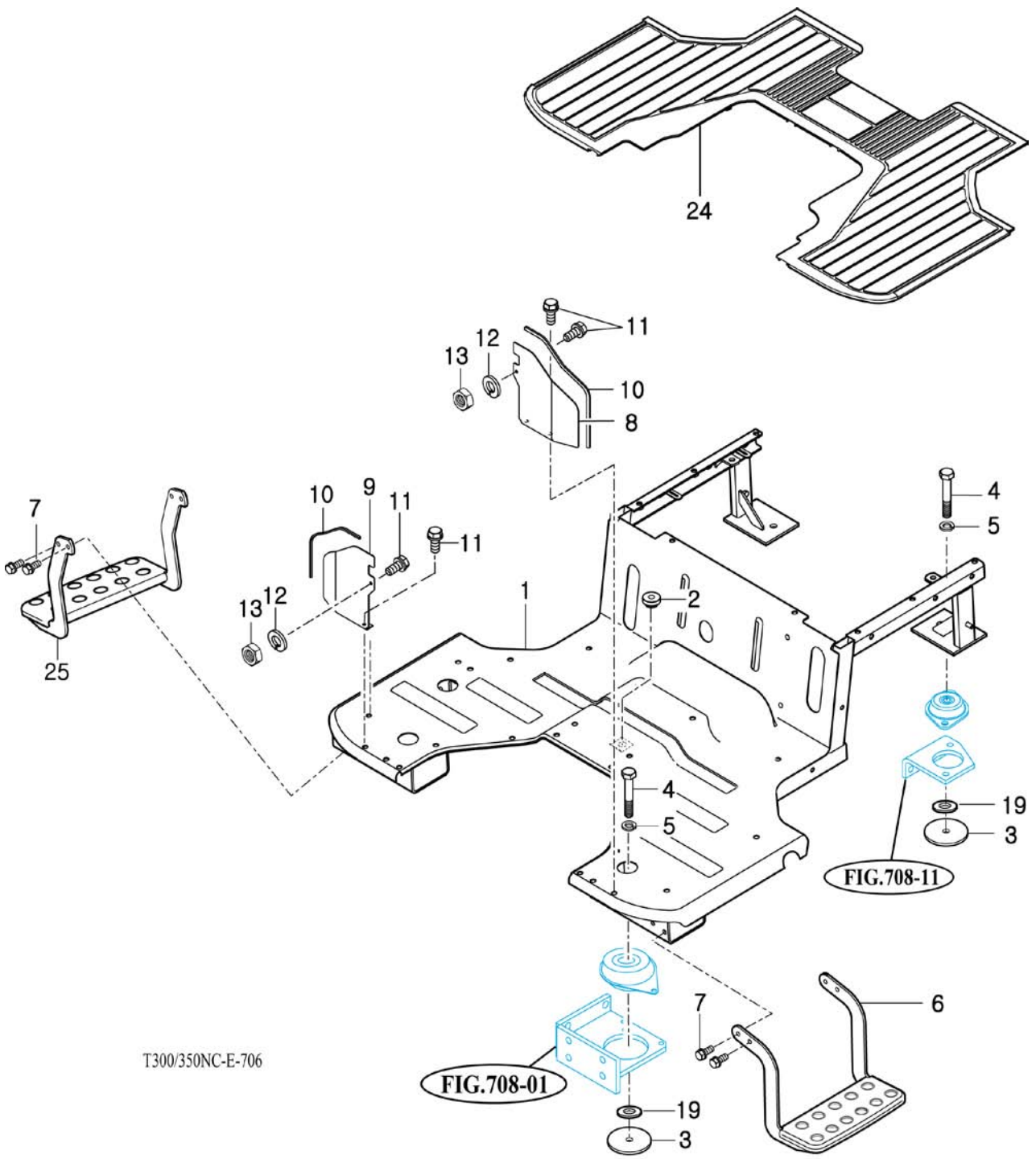

NOTE

FIG 706 T300NC / T350NC	FLOOR PANEL	P1	Year / Month 2008 / 12	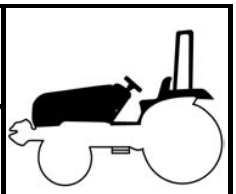

KEY NO.		PART NO.	DESCRIPSTION	SPEC.	QTY.	REPAIR	EFFECTIVE DATE	REMARKS
706	001	16706312005GB	PANEL COMP , FLOOR		1			
706	002	36576180050	RUBBER , CUSHION		1			
706	003	14576252200GB	PLATE COMP		4			
706	004	V2014612075	BOLT , HEX	M12X75	4			
706	005	V4011600120	WASHER , SPRING	M12	4			
706	006	13016062600GB	STEP COMP		1			
706	007	V2183610025	BOLT , HEX/SP	M10X25	8			
707	008	14776310100GB	SUPPORT , LH DASH FLOOR		1			
707	009	14776310200GB	SUPPORT , RH DASH FLOOR		4			
707	010	14776312600	INSULATOR , SUPPORT DASH FLOOR		1			
707	011	V2183608020	BOLT , HEX/SP	M8X20	2			
707	012	V4011600080	WASHER , SPRING	M8	4			
707	013	V3043600080	NUT , HEX/2	M8	4			
706	019	V4111600120	WASHER , PLAIN		4			
706	024	16706310011	MAT		1			
706	025	16606062603GB	STEP COMP		1			

NOTE	

FIG 707 T300/T350NC	SEAT	P1	Year / Month 2008 / 12	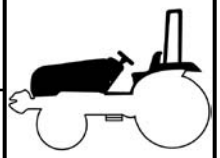

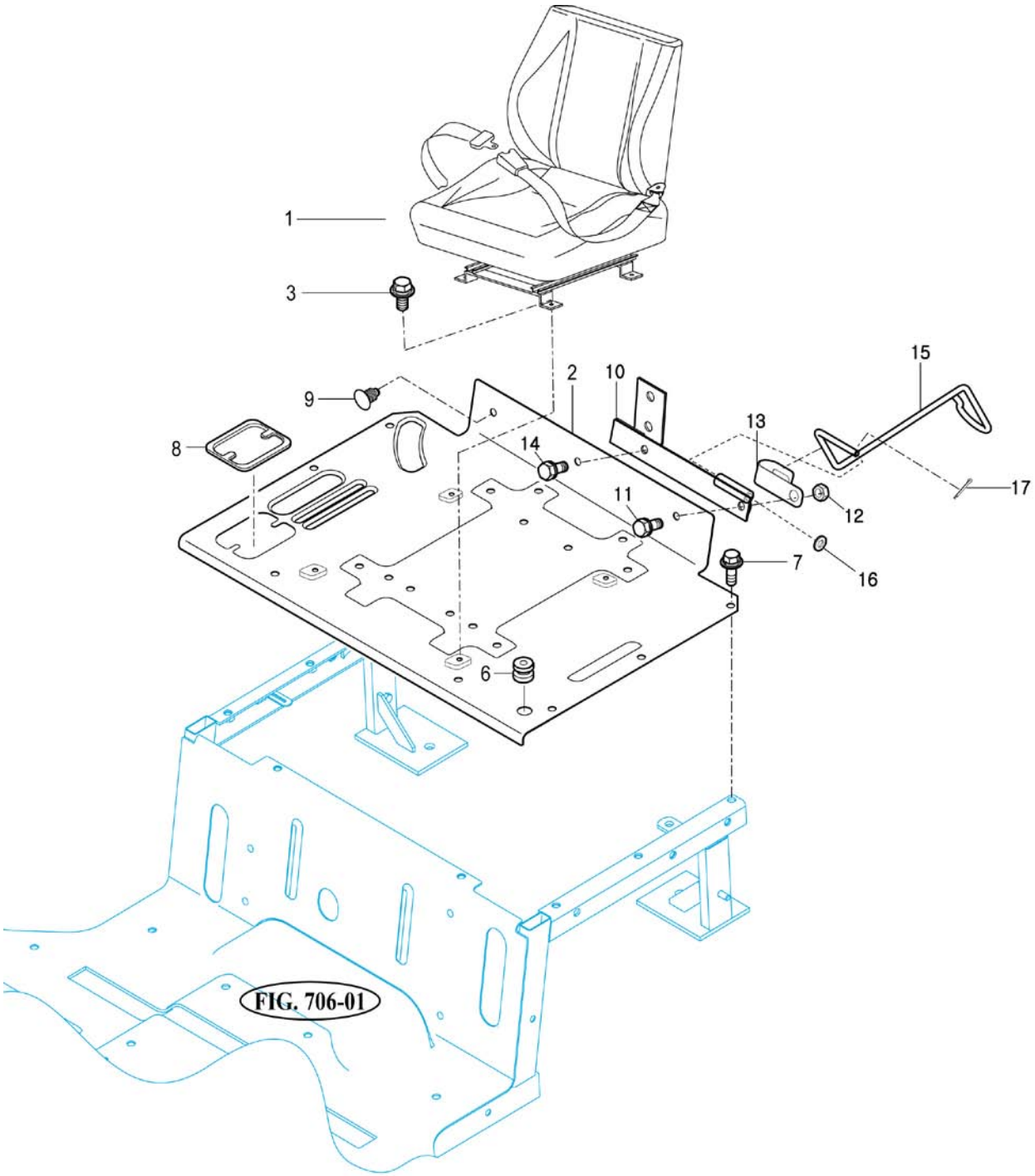

NOTE	

FIG 707 T300NC / T350NC	SEAT	P1	Year / Month 2008 / 12	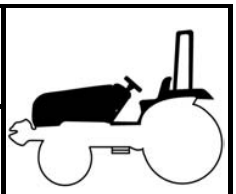

KEY NO.	PART NO.	DESCRIPSTION	SPEC.	QTY.	REPAIR	EFFECTIVE DATE	REMARKS
707 001	15116112600	SEAT ASSY		1			
707 002	14976312303GB	PANEL COMP , SEAT		1			
707 003	V2183608025	BOLT , HEX/SP	M8X25	4			
707 006	37371540030	RUBBER , SEAT		1			
707 007	V2183608020	BOLT , HEX/SP	M8X20	8			
707 008	14946082200	INSULATOR , MAIN		1			
707 009	15276040020	CLIP , TRIM		1			
707 010	13217033200GB	BRACKET COMP , SMV		1			
707 011	V2183608025	BOLT , HEX/SP	M8X25	1			
707 012	V3042600080	NUT , HEX/2	M8	1			
707 013	14256210040	CLAMP , 9		1			
707 014	V2183608016	BOLT , HEX/SP	M8X16	1			
707 015	13215250070	STOPPER ASSY , TOP LINK		1			
707 016	V4111600060	WASHER , PLAIN	M6	1			
707 017	V5001920015	PIN , SPLIT		1			

NOTE	

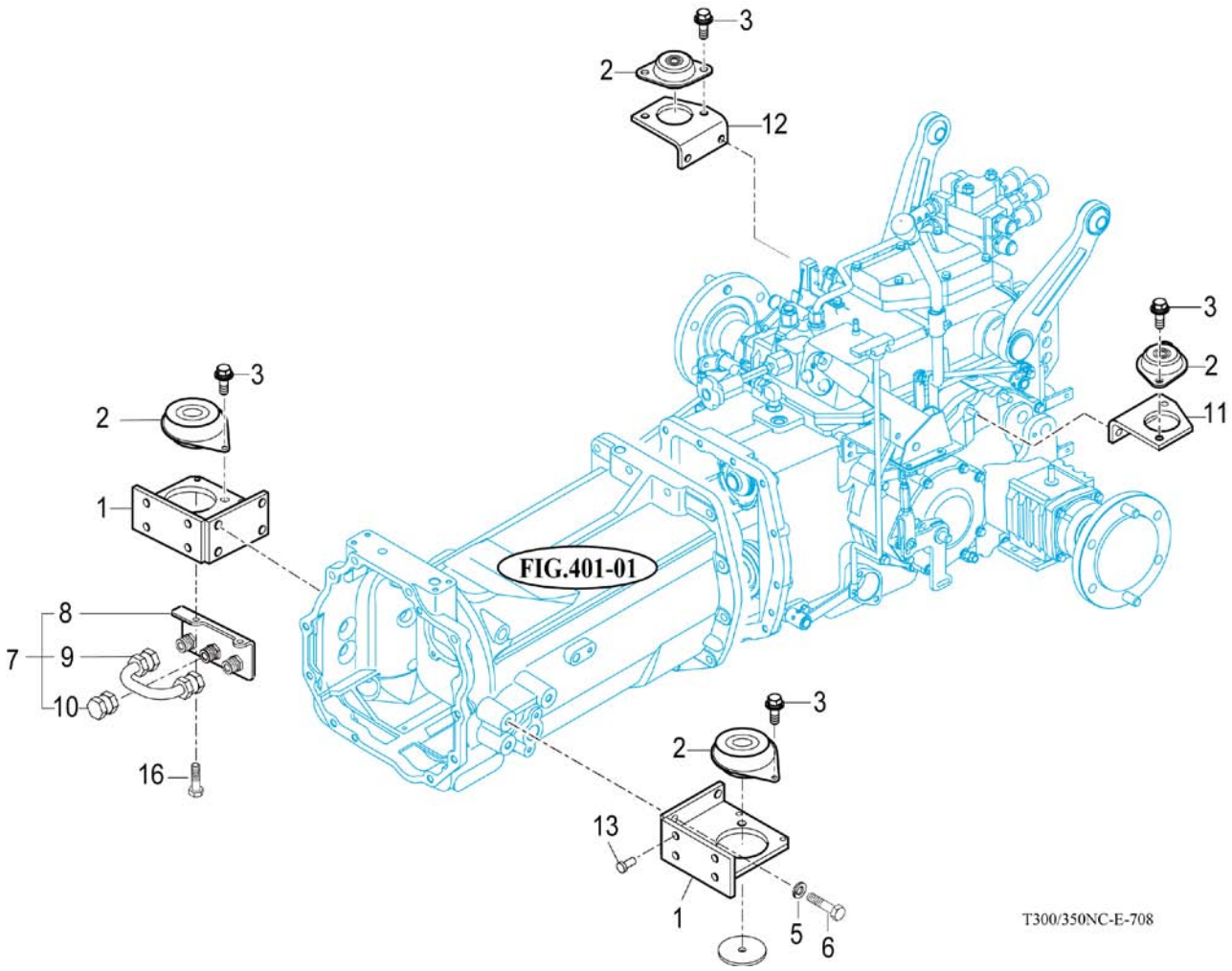

NOTE

FIG 708 T300NC / T350NC	FRONT & REAR MOUNTING	P1	Year / Month 2008 / 12	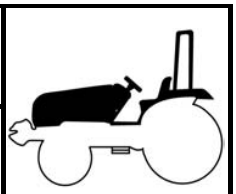

KEY NO.		PART NO.	DESCRIPSTION	SPEC.	QTY.	REPAIR	EFFECTIVE DATE	REMARKS
708	001	14576252101GB	BRACKET COMP , FR MOUNTING		2			
708	002	15966250010	INSULATOR		4			
708	003	V2173612020	BOLT , HEX/S	M12X20	8			
708	005	V4011600120	WASHER , SPRING	M12	6			
708	006	V2013612030	BOLT , HEX	M12X30	6			
708	007	13015104000	BRACKET SUB , LODER		1			
708	008	14585104303GB	STAY COMP		1			
708	009	15004073200GB	PIPE COMP		1			
708	010	15006210111	CAP , PF1/2		1			
708	011	16706260011	BRACKET , RR LH MOUNT		1			
708	012	16706260021	BRACKET , RR RH MOUNT		1			
708	013	14272010160	CAP		8			
708	016	V2173608020	BOLT , HEX/S		2			

NOTE	

FIG 709 T300/T350NC	ROPS	P2	Year / Month 2008 / 12	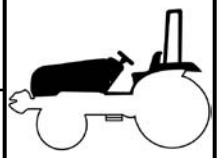

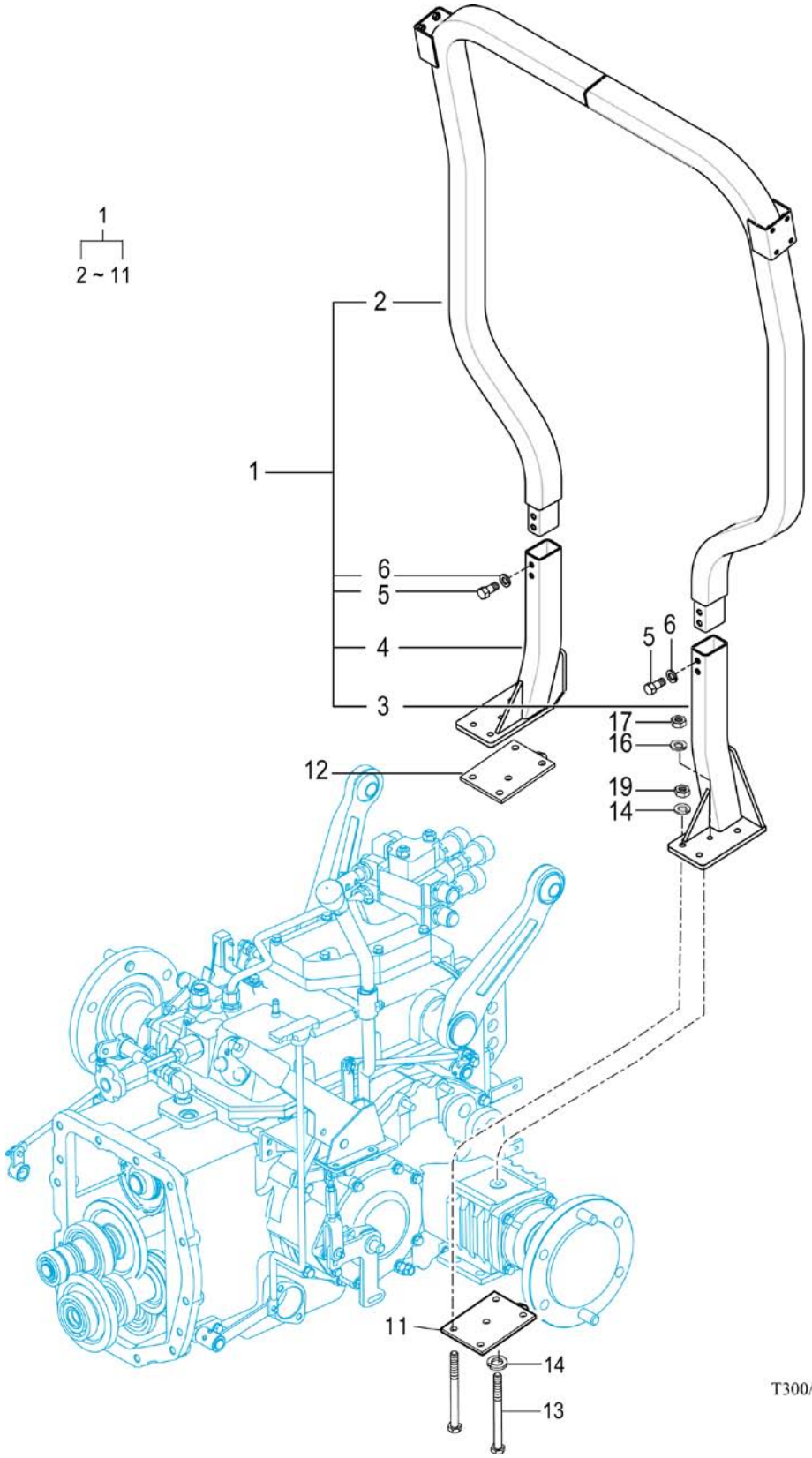

NOTE	

FIG 709 T300NC / T350NC	ROPS	P1	Year / Month 2008 / 12	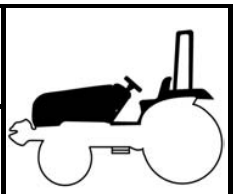

KEY NO.		PART NO.	DESCRIPSTION	SPEC.	QTY.	REPAIR	EFFECTIVE DATE	REMARKS
709	001	13017027000	ROPS SUB , 2 POLES		1			
709	002	16707027302GB	FRAME COMP , ROPS/UP		1			
709	003	16707027406GB	FRAME COMP , LOW LH		1			
709	004	16707027506GB	FRAME COMP , LOW RH		1			
709	005	V2014612025	BOLT , HEX	M12X25	4			
709	006	V4011600120	WASHER , SPRING	M12	4			
709	011	16705143002GB	BRACKET COMP , LH CHECK		1			
709	012	16705143102GB	BRACKET COMP , RH CHECK		1			
709	013	V2014612160	BOLT , HEX	M12X160	8			
709	014	V4011600120	WASHER , SPRING	M12	8			
709	016	V4011600100	WASHER , SPRING	M10	2			
709	017	V3043600100	NUT , HEX/2	M10	2			
709	019	V3043600120	NUT , HEX/2	M12	6			

NOTE	

FIG 801 T300/T350NC	BATTERY & MOUNTING	P1	Year / Month 2008 / 12	

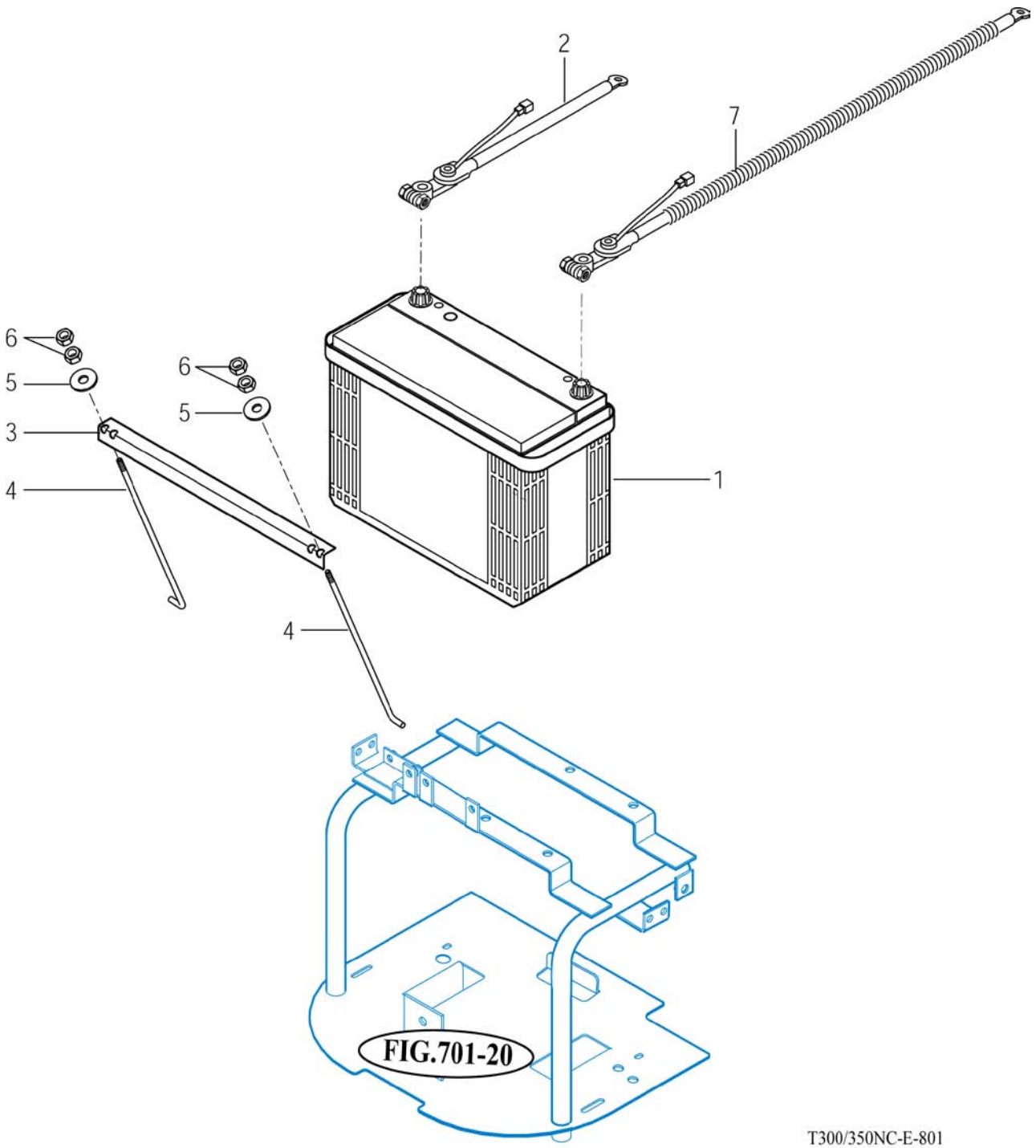

NOTE

FIG 801 T300NC / T350NC	BATTERY & MOUNTING	P1	Year / Month 2008 / 12	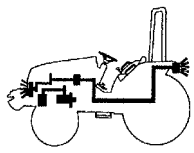

KEY NO.		PART NO.	DESCRIPSTION	SPEC.	QTY.	REPAIR	EFFECTIVE DATE	REMARKS
801	001	14216000521	BATTERY ASSY			1		
801	002	13016503001	HARNESS			1		
801	003	14226870010GB	PLATE , BATTERY SET			1		
801	004	17706210021	BOLT . BATTERY SET			2		
801	005	35605033020	WASHER , WIRE WITH DRAWAL			2		
801	006	V3002600060	NUT , HEX/1		M6	4		
801	007	14886210020	CABLE ASSY , BATTERY			1		

NOTE	

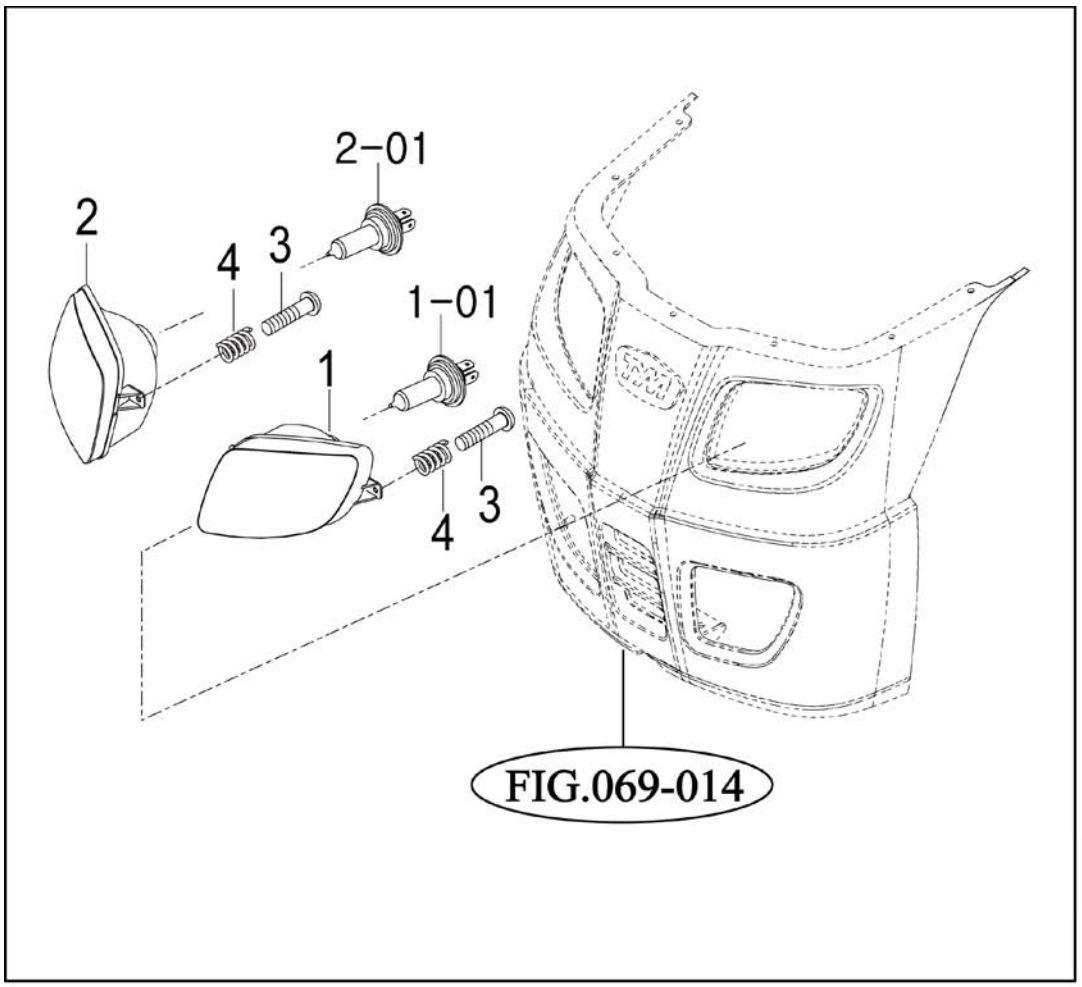

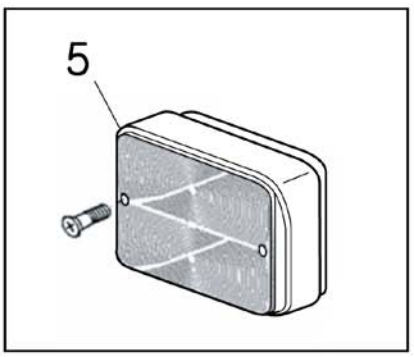

T300/350NC-E-802

*NOT SERVICED SEPARATELY

NOTE

FIG 802 T300NC / T350NC	LAMP	P1	Year / Month 2008 / 12	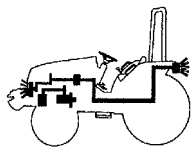

KEY NO.	PART NO.	DESCRIPSTION	SPEC.	QTY.	REPAIR	EFFECTIVE DATE	REMARKS
802 001	16506522001	LIGHT , LH HEAD		1			
802 00101	16006522040	.BULB , 12V 50/40W		1			
802 002	16506523001	LIGHT , RH HEAD		1			
802 00201	16006522040	.BULB , 12V 50/40W		1			
802 003	V1112606025	SCREW , C/R PAN	M6X25	6			
802 004	36108010080	SPRING		6			

NOTE	

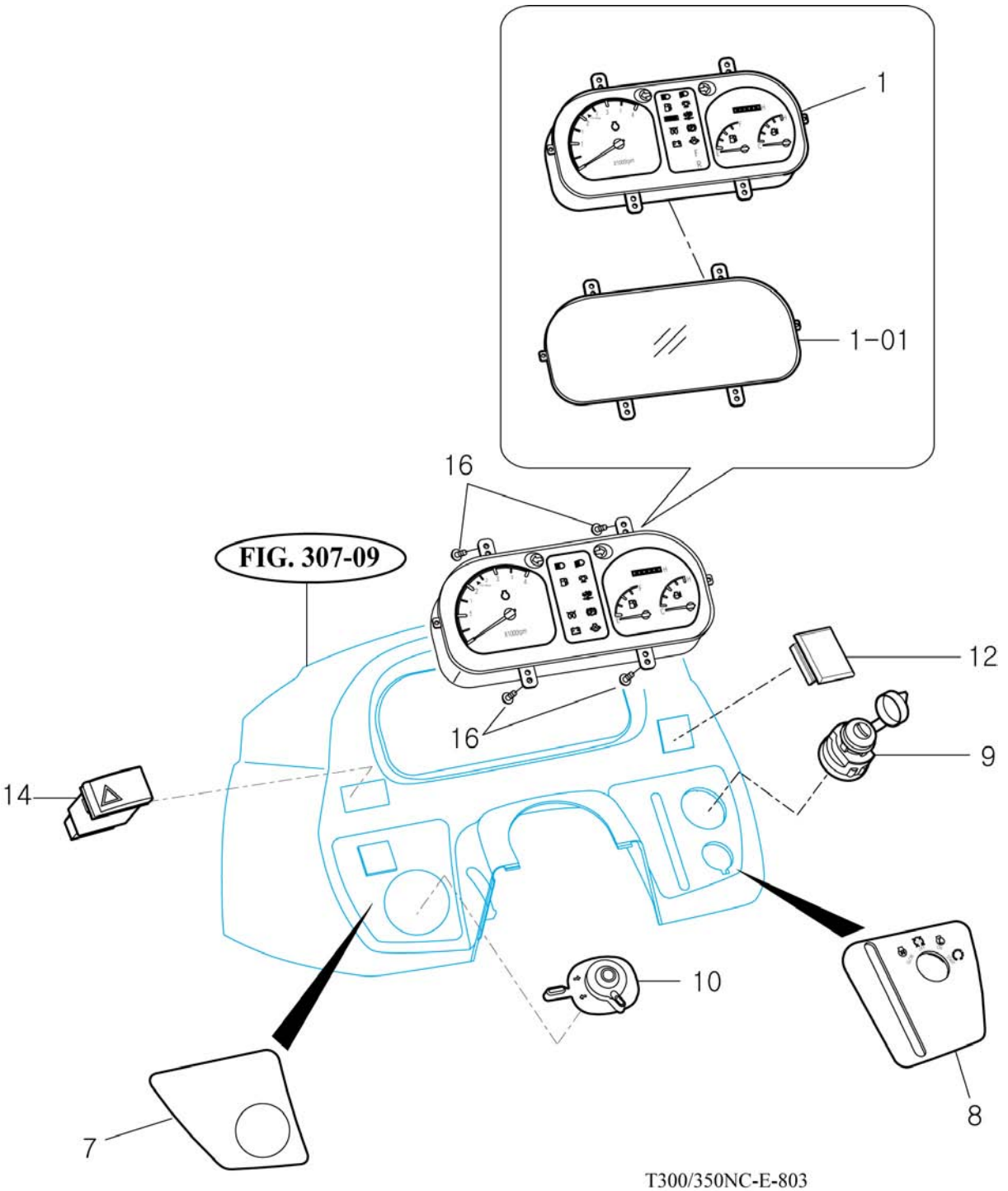

NOTE

FIG 803 T300NC / T350NC	INSTRUMENT PANEL	P1	Year / Month 2008 / 12	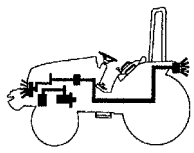

KEY NO.		PART NO.	DESCRIPSTION	SPEC.	QTY.	REPAIR	EFFECTIVE DATE	REMARKS
803	001	13016602000	PANEL ASSY , INSTRUMENT		1			
803	00101	13156602110	WINDOW GLASS		1	C		
803	007	13016031020	LABEL , LH CONTROL		1			
803	008	13216031030	LABEL , RH CONTROL		1			
803	009	16626582402	SWITCH SET , ROTARY		1	C		
803	010	13156642201	SWITCH , COMBI		1	C		
803	012	17684011970	CAP (CLOUM/LH)		1	C		
803	014	36142612400	SWITCH		1	C		
803	016	V1222604012	SCREW , C/R PAN /SP	M4X12	4			

NOTE	

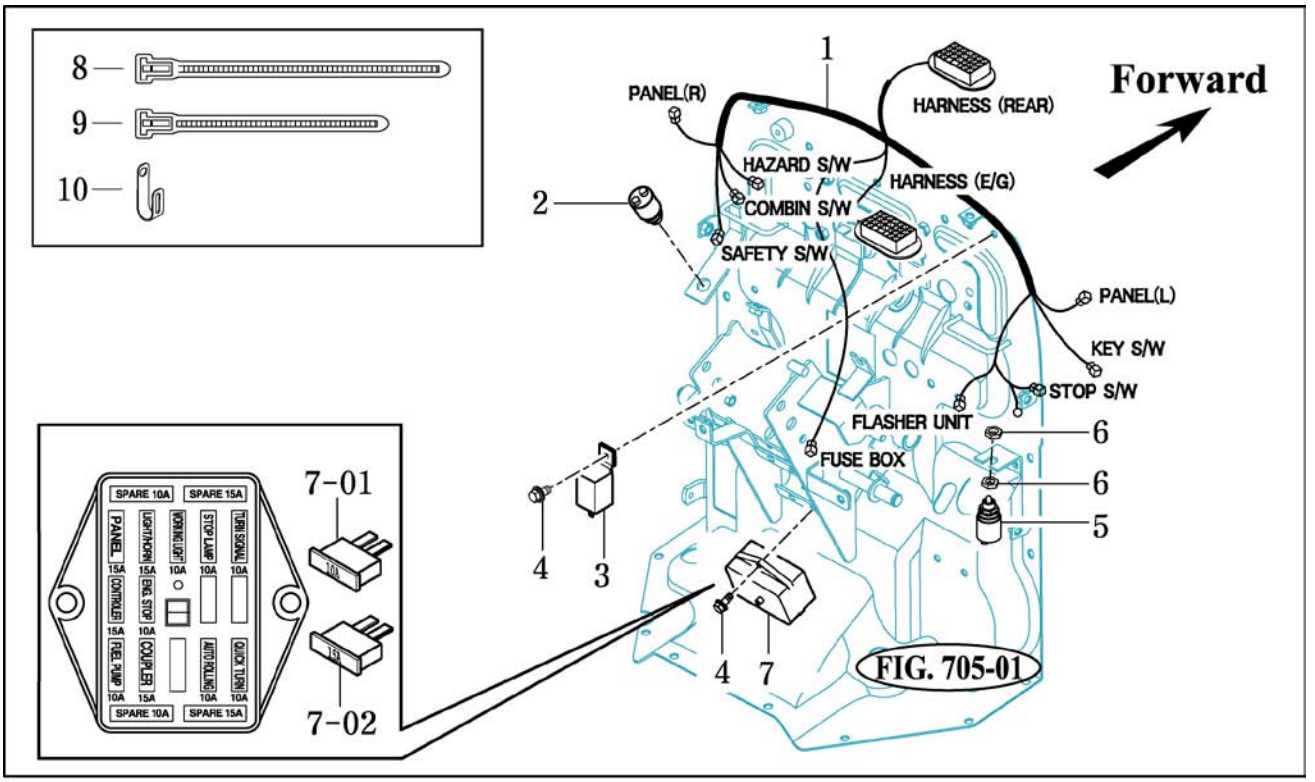

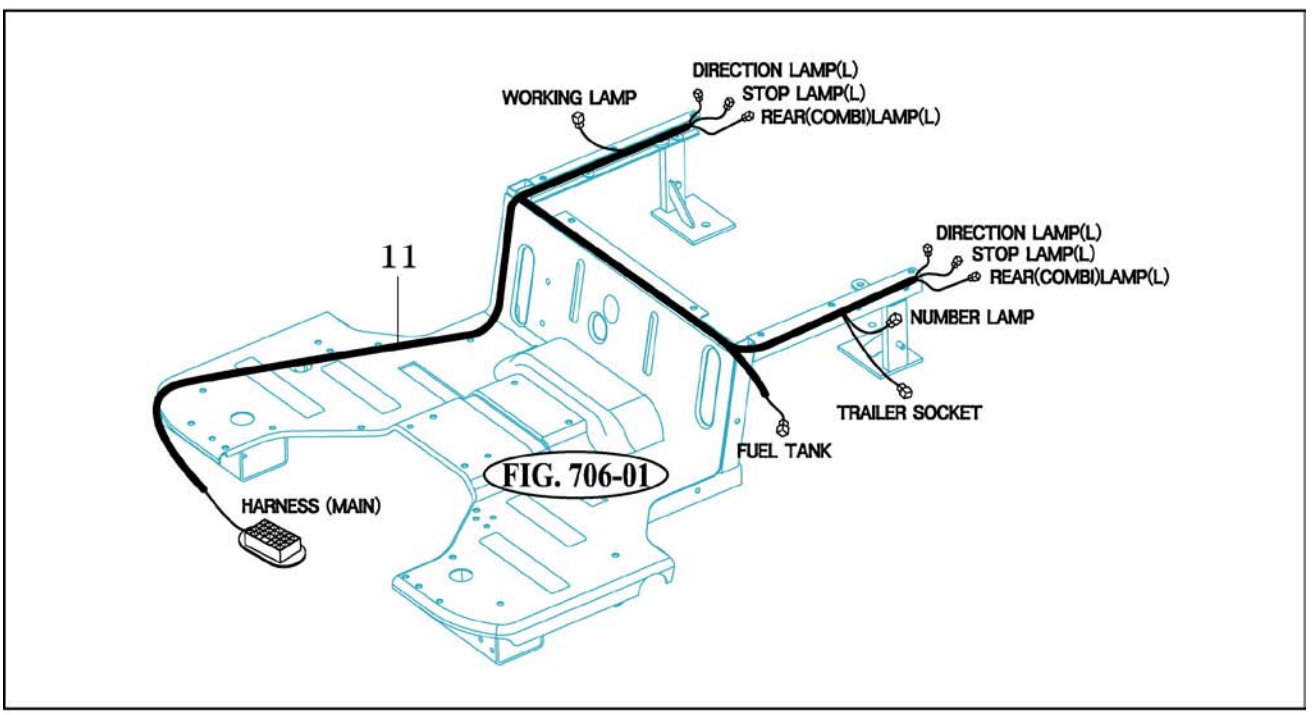

T300/350NC-E-804

NOTE

FIG 804 T300NC / T350NC	ELECTRIC SYSTEM	P1	Year / Month 2008 / 12	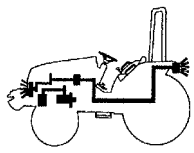

KEY NO.		PART NO.	DESCRIPSTION	SPEC.	QTY.	REPAIR	EFFECTIVE DATE	REMARKS
804	001	13216683000	HARNESS ASSY , MAIN		1			
804	002	15606642500	SWITCH SET , PUSH		1	C		
804	003	15606642401	FLASHER SET	label:gold	1	C		
804	004	V2323606016	BOLT , C/R HEX/SP	M6X16	4			
804	005	15186213200	SWITCH ASSY , STOP LIGHT		1	C		
804	006	14326210061	NUT , LOCK M12		2			
804	007	14946642101	CASE ASSY . FUSE		1			
804	00701	15756230100	FUSE	32V10A	5			
804	00702	15756230110	FUSE	32V15A	3			
804	008	13424020060	BAND , 250		2			
804	009	13764020030	BAND , 140		3			
804	010	14441010161	CLAMP , RADIATOR HOSE		1			
804	011	13216683600	HARNESS ASSY , RR		1			

NOTE	

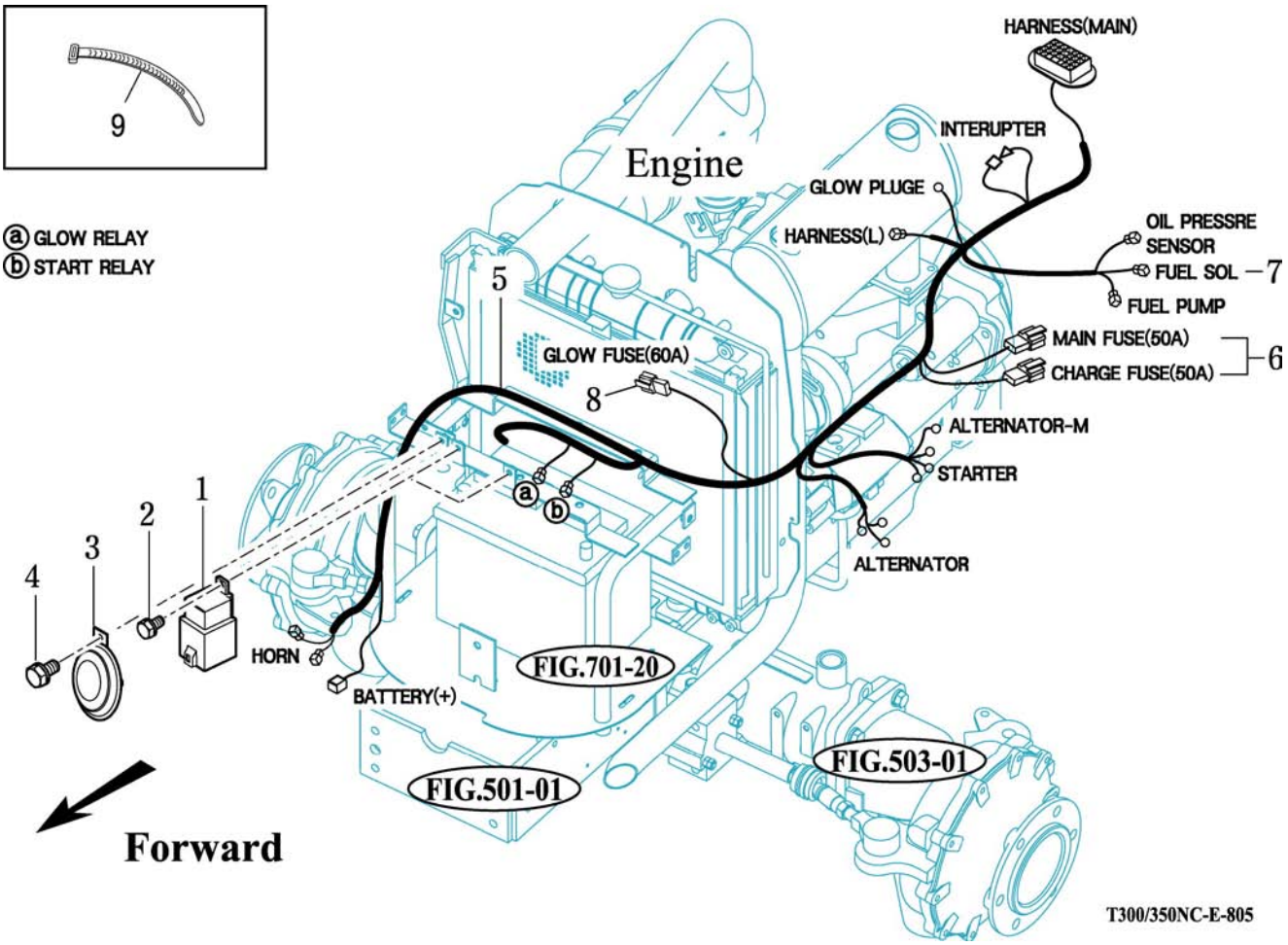
9
ⓐ GLOW RELAY
ⓑ START RELAY
HARNESS(MAIN)
INTERUPTER
Engine
GLOW PLUGE
HARNESS(L)
OIL PRESSRE SENSOR
FUEL SOL
FUEL PUMP
7
MAIN FUSE(50A)
CHARGE FUSE(50A)
6
5
GLOW FUSE(60A)
8
ALTERNATOR-M
STARTER
ALTERNATOR
1
2
3
4
HORN
BATTERY(+)
FIG.701-20
FIG.501-01
FIG.503-01
Forward
T300/350NC-E-805

NOTE	

FIG 805 T300NC / T350NC	HARNESS	P1	Year / Month 2008 / 12	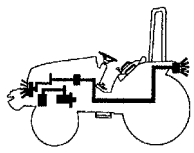

KEY NO.	PART NO.	DESCRIPSTION	SPEC.	QTY.	REPAIR	EFFECTIVE DATE	REMARKS
805 001	13016641110	RELAY , PREHEAT		6			
805 002	V2193606016	BOLT , HEX/SPL		6			
805 003	13266212000	HORN		1			
805 004	V2113606012	BOLT , HEX /S		1			
805 005	13016682000	HARNESS ASSY , E/G		1			
805 006	36502612620	FUSE , BLOW		2	B		
805 007	30A8700600	CONNECTOR(3P), MHI		1			
805 008	19026802120	FUSE , SLOW BLOW		1			
805 009	13424020060	BAND , HARNESS		5			

NOTE	

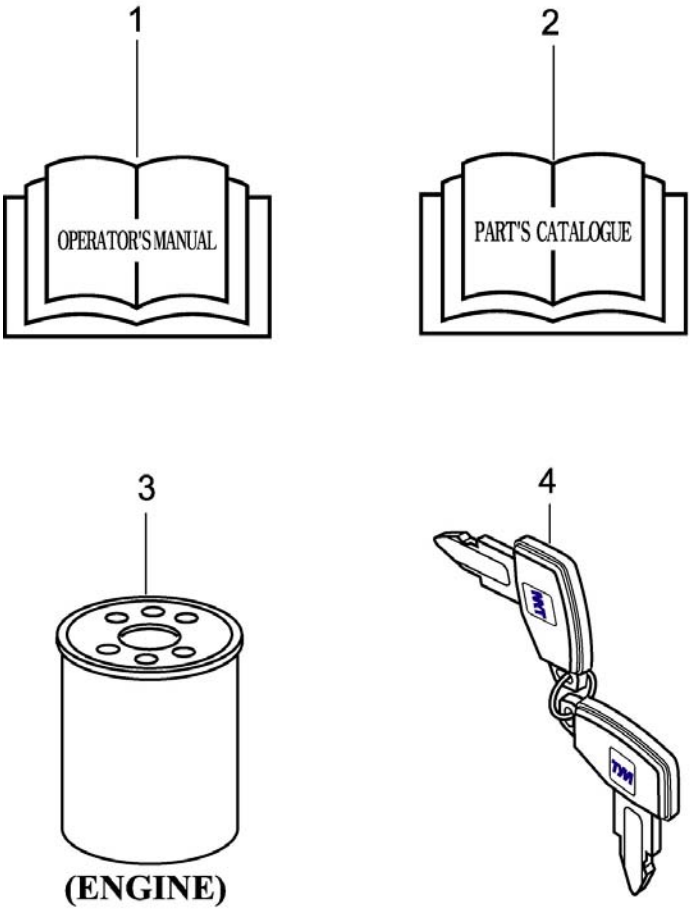

T300/350NC-E-902

NOTE

FIG 901 T300NC / T350NC	TOOL & ACCESSORY	P1	Year / Month 2008 / 12	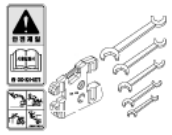

KEY NO.		PART NO.	DESCRIPSTION	SPEC.	QTY.	REPAIR	EFFECTIVE DATE	REMARKS
901	001	13219400010	OPERATOR'S MANUAL		1			
901	002	13219400020	PARTS CATALOGUE		1			
901	003	11930535150	CARTRIDGE , OIL(ENGINE)		1			
901	004	14446213202	KEY ASSY		1			

NOTE	

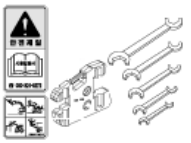

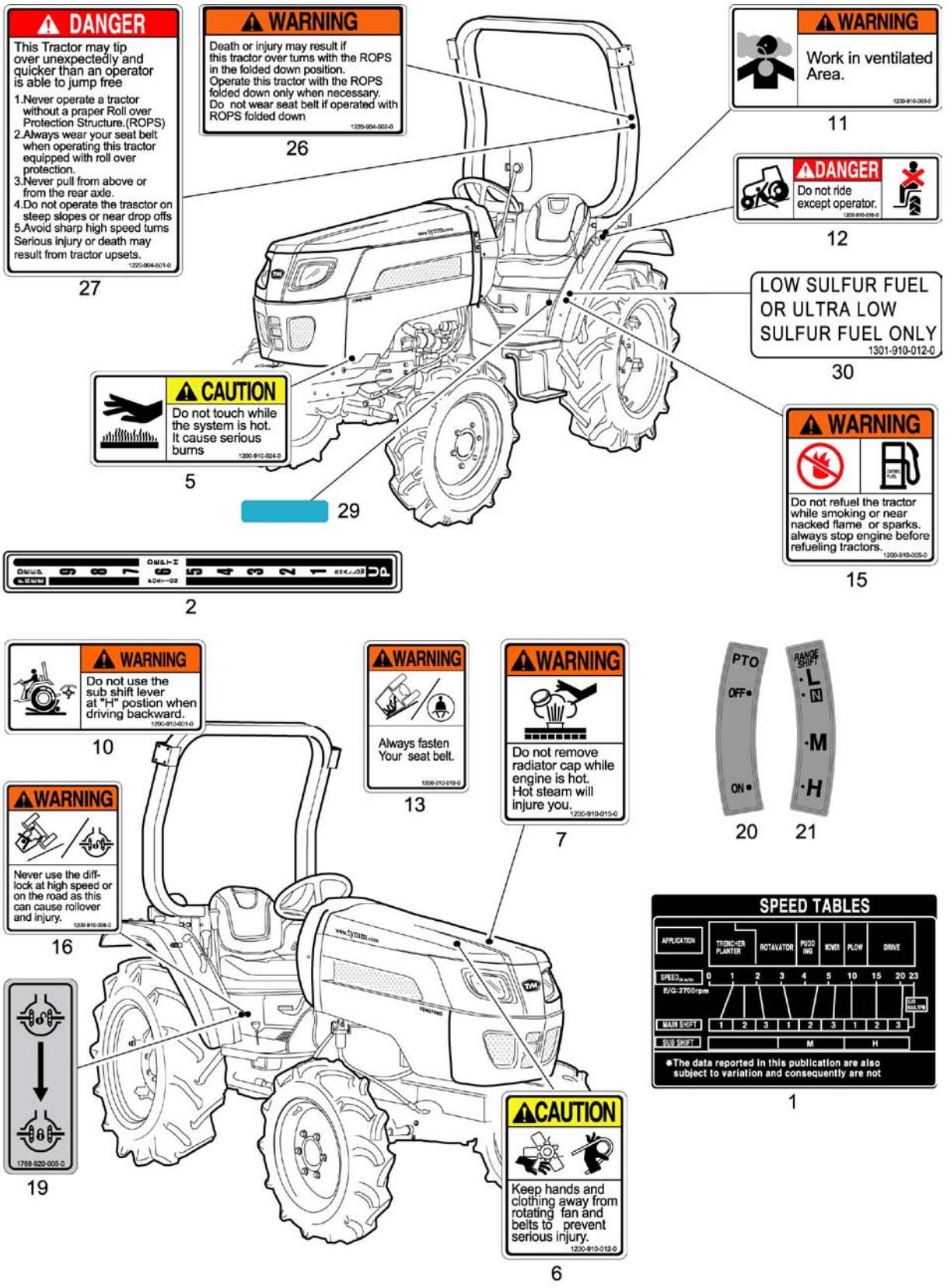
DANGER
This Tractor may tip over unexpectedly and quicker than an operator is able to jump free
1.Never operate a tractor without a praper Roll over Protection Structure.(ROPS)
2.Always wear your seat belt when operating this tractor equipped with roll over protection.
3.Never pull from above or from the rear axle.
4.Do not operate the trasctor on steep slopes or near drop offs
5.Avoid sharp high speed turns
Serious injury or death may result from tractor upsets.
1220-904-501-0
27
WARNING
Death or injury may result if this tractor over turns with the ROPS in the folded down position.
Operate this tractor with the ROPS folded down only when necessary.
Do not wear seat belt if operated with ROPS folded down
1220-904-502-0
26
WARNING
Work in ventilated Area.
1200-910-003-0
11
DANGER
Do not ride except operator.
1200-910-016-0
12
LOW SULFUR FUEL
OR ULTRA LOW
SULFUR FUEL ONLY
1301-910-012-0
30
CAUTION
Do not touch while the system is hot.
It cause serious burns
1200-910-024-0
5
29
WARNING
Do not refuel the tractor while smoking or near nacked flame or sparks.
always stop engine before refueling tractors.
1200-910-005-0
15
2
WARNING
Do not use the sub shift lever at "H" postion when driving backward.
1200-910-001-0
10
WARNING
Always fasten Your seat belt.
1200-910-019-0
13
WARNING
Do not remove radiator cap while engine is hot.
Hot steam will injure you.
1200-910-015-0
7
PTO
OFF
ON
20
RANGE SHIFT
L
N
M
H
21
WARNING
Never use the diff-lock at high speed or on the road as this can cause rollover and injury.
1200-910-006-0
16
1768-920-005-0
19
CAUTION
Keep hands and clothing away from rotating fan and belts to prevent serious injury.
1200-910-012-0
6
SPEED TABLES
APPLICATION
TRENCHER PLANTER
ROTAVATOR
PUDDING
MOWER
PLOW
DRIVE
SPEED
E/G:2700rpm
0 1 2 3 4 5 10 15 20 23
MAIN SHIFT
1 2 3 1 2 3 1 2 3
SUB SHIFT
M H
*The data reported in this publication are also subject to variation and consequently are not
1

NOTE

FIG 902 T300NC / T350NC	LABEL	P1	Year / Month 2008 / 12	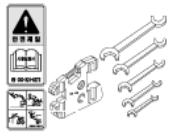

KEY NO.		PART NO.	DESCRIPSTION	SPEC.	QTY.	REPAIR	EFFECTIVE DATE	REMARKS
902	001	13219040030	LABEL , SPEED		1			
902	002	12009040040	LABEL , HYDRAULIC CONTROL		1			
902	003	12009100020	LABEL , WARNING PARKING		1			
902	004	12009100070	LABEL , WARNING BRAKE		1			
902	005	12009100240	LABEL , CAUTION MUFFLER		1			
902	006	12009100120	LABEL , CAUTION FAN		1			
902	007	12009100150	LABEL , WARNING RADIATOR		1			
902	008	12009100230	LABEL , CAUTION OPERATION		2			
902	009	12009100130	LABEL , DANGER PTO		1			
902	010	12009100010	LABEL , WARNING SUB SHIFTER		1			
902	011	12009100030	LABEL , WARNING EXHAUST		1			
902	012	12009100160	LABEL , DANGER RIDING		1			
902	013	12009100190	LABEL , WARNING BELT		1			
902	014	12009100210	LABEL , WARNING THROTTLE		1			
902	015	12009100050	LABEL , WARNING FIRE		1			
902	016	12009100060	LABEL , WARNING DIFF		1			
902	017	12009100140	LABEL , WARNING DRAW		1			
902	018	17689100170	LABEL , CAUTION SAFETY		1			
902	019	17689200050	LABEL , DIFF		1			
902	020	13219020060	LABEL , PTO		1			
902	021	14979010070	LABEL , SHIFT		1			
902	022	13219010040	LABEL , LH SIDE ,T300/TYM		1			
902	023	13219010050	LABEL , RH SIDE,T300/TYM		1			
902	024	13219020040	LABEL , LH SIDE ,T350/TYM		1			
902	025	13219020050	LABEL , RH SIDE,T350/TYM		1			
902	026	12209045020	LABEL , WARNING . ROPS		1			
902	027	12209045010	LAVEL , DANGER . ROPS		1			
902	028	12009430041	LABEL . 4WD		1			
902	029	14726400010	SEAL , HANDBRAKE		1			
902	030	13019100120	LABEL , LOW SULFUL FUEL		1			
902	031	13219100350	LABEL , PRIMARY GEAR CHANGE 2		1			
902	032	12609040620	LABEL , STARTING WARNING		1			
902	033	12009100040	LABEL , WARNING STOP VALVE		1			

NOTE	

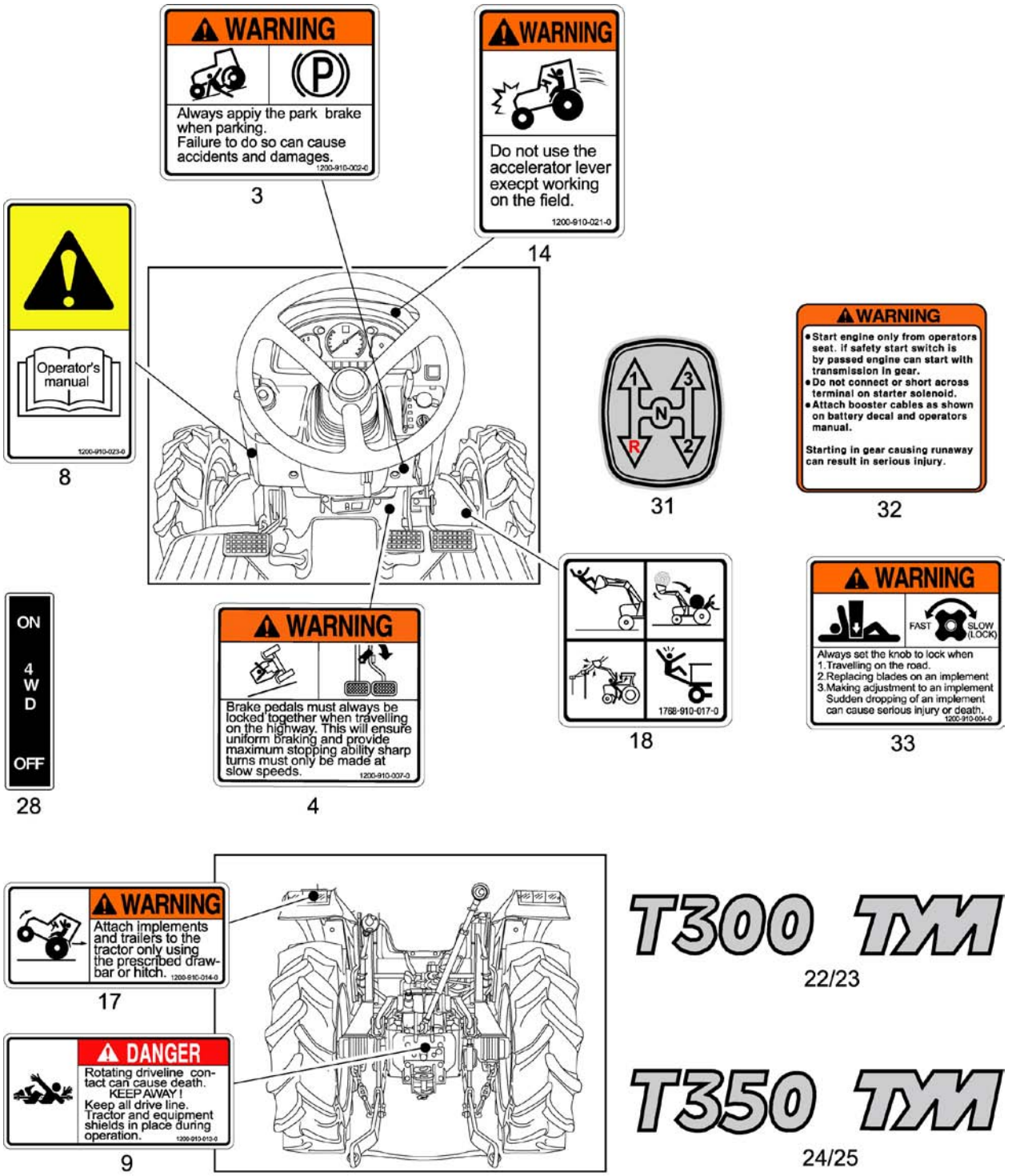
WARNING
Always appiy the park brake when parking.
Failure to do so can cause accidents and damages.
1200-910-002-0
3
WARNING
Do not use the accelerator lever execpt working on the field.
1200-910-021-0
14
Operator's manual
1200-910-023-0
8
1
3
N
R
2
31
WARNING
• Start engine only from operators seat. If safety start switch is by passed engine can start with transmission in gear.
• Do not connect or short across terminal on starter solenoid.
• Attach booster cables as shown on battery decal and operators manual.
Starting in gear causing runaway can result in serious injury.
32
ON
4
W
D
OFF
28
WARNING
Brake pedals must always be locked together when travelling on the highway. This will ensure uniform braking and provide maximum stopping ability sharp turns must only be made at slow speeds.
1200-910-007-0
4
1768-910-017-0
18
WARNING
FAST
SLOW (LOCK)
Always set the knob to lock when
1.Travelling on the road.
2.Replacing blades on an implement
3.Making adjustment to an implement
Sudden dropping of an implement can cause serious injury or death.
1200-910-004-0
33
WARNING
Attach implements and trailers to the tractor only using the prescribed draw-bar or hitch.
1200-910-014-0
17
DANGER
Rotating driveline con-tact can cause death.
KEEP AWAY !
Keep all drive line. Tractor and equipment shields in place during operation.
1200-910-013-0
9
T300 TYM
22/23
T350 TYM
24/25

NOTE	

FIG 902 T300NC / T350NC	LABEL	P2	Year / Month 2008 / 12	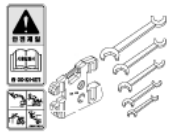

KEY NO.		PART NO.	DESCRIPSTION	SPEC.	QTY.	REPAIR	EFFECTIVE DATE	REMARKS
902	001	13219040030	LABEL , SPEED		1			
902	002	12009040040	LABEL , HYDRAULIC CONTROL		1			
902	003	12009100020	LABEL , WARNING PARKING		1			
902	004	12009100070	LABEL , WARNING BRAKE		1			
902	005	12009100240	LABEL , CAUTION MUFFLER		1			
902	006	12009100120	LABEL , CAUTION FAN		1			
902	007	12009100150	LABEL , WARNING RADIATOR		1			
902	008	12009100230	LABEL , CAUTION OPERATION		2			
902	009	12009100130	LABEL , DANGER PTO		1			
902	010	12009100010	LABEL , WARNING SUB SHIFTER		1			
902	011	12009100030	LABEL , WARNING EXHAUST		1			
902	012	12009100160	LABEL , DANGER RIDING		1			
902	013	12009100190	LABEL , WARNING BELT		1			
902	014	12009100210	LABEL , WARNING THROTTLE		1			
902	015	12009100050	LABEL , WARNING FIRE		1			
902	016	12009100060	LABEL , WARNING DIFF		1			
902	017	12009100140	LABEL , WARNING DRAW		1			
902	018	17689100170	LABEL , CAUTION SAFETY		1			
902	019	17689200050	LABEL , DIFF		1			
902	020	13219020060	LABEL , PTO		1			
902	021	14979010070	LABEL , SHIFT		1			
902	022	13219010040	LABEL , LH SIDE ,T300/TYM		1			
902	023	13219010050	LABEL , RH SIDE,T300/TYM		1			
902	024	13219020040	LABEL , LH SIDE ,T350/TYM		1			
902	025	13219020050	LABEL , RH SIDE,T350/TYM		1			
902	026	12209045020	LABEL , WARNING . ROPS		1			
902	027	12209045010	LAVEL , DANGER . ROPS		1			
902	028	12009430041	LABEL . 4WD		1			
902	029	14726400010	SEAL , HANDBRAKE		1			
902	030	13019100120	LABEL , LOW SULFUL FUEL		1			
902	031	13219100350	LABEL , PRIMARY GEAR CHANGE 2		1			
902	032	12609040620	LABEL , STARTING WARNING		1			
902	033	12009100040	LABEL , WARNING STOP VALVE		1			

NOTE	

REF NO	PART NO.	REF NO	PART NO.	REF NO	PART NO.
001	1000000000	001	1000000000	001	1000000000
002	1000000000	002	1000000000	002	1000000000
003	1000000000	003	1000000000	003	1000000000
004	1000000000	004	1000000000	004	1000000000
005	1000000000	005	1000000000	005	1000000000
006	1000000000	006	1000000000	006	1000000000
007	1000000000	007	1000000000	007	1000000000
008	1000000000	008	1000000000	008	1000000000
009	1000000000	009	1000000000	009	1000000000
010	1000000000	010	1000000000	010	1000000000
011	1000000000	011	1000000000	011	1000000000
012	1000000000	012	1000000000	012	1000000000
013	1000000000	013	1000000000	013	1000000000
014	1000000000	014	1000000000	014	1000000000
015	1000000000	015	1000000000	015	1000000000
016	1000000000	016	1000000000	016	1000000000
017	1000000000	017	1000000000	017	1000000000
018	1000000000	018	1000000000	018	1000000000
019	1000000000	019	1000000000	019	1000000000
020	1000000000	020	1000000000	020	1000000000
021	1000000000	021	1000000000	021	1000000000
022	1000000000	022	1000000000	022	1000000000
023	1000000000	023	1000000000	023	1000000000
024	1000000000	024	1000000000	024	1000000000
025	1000000000	025	1000000000	025	1000000000
026	1000000000	026	1000000000	026	1000000000
027	1000000000	027	1000000000	027	1000000000
028	1000000000	028	1000000000	028	1000000000
029	1000000000	029	1000000000	029	1000000000
030	1000000000	030	1000000000	030	1000000000
031	1000000000	031	1000000000	031	1000000000
032	1000000000	032	1000000000	032	1000000000
033	1000000000	033	1000000000	033	1000000000
034	1000000000	034	1000000000	034	1000000000
035	1000000000	035	1000000000	035	1000000000
036	1000000000	036	1000000000	036	1000000000
037	1000000000	037	1000000000	037	1000000000
038	1000000000	038	1000000000	038	1000000000
039	1000000000	039	1000000000	039	1000000000
040	1000000000	040	1000000000	040	1000000000
041	1000000000	041	1000000000	041	1000000000
042	1000000000	042	1000000000	042	1000000000
043	1000000000	043	1000000000	043	1000000000
044	1000000000	044	1000000000	044	1000000000
045	1000000000	045	1000000000	045	1000000000
046	1000000000	046	1000000000	046	1000000000
047	1000000000	047	1000000000	047	1000000000
048	1000000000	048	1000000000	048	1000000000
049	1000000000	049	1000000000	049	1000000000
050	1000000000	050	1000000000	050	1000000000
051	1000000000	051	1000000000	051	1000000000
052	1000000000	052	1000000000	052	1000000000
053	1000000000	053	1000000000	053	1000000000
054	1000000000	054	1000000000	054	1000000000
055	1000000000	055	1000000000	055	1000000000
056	1000000000	056	1000000000	056	1000000000
057	1000000000	057	1000000000	057	1000000000
058	1000000000	058	1000000000	058	1000000000
059	1000000000	059	1000000000	059	1000000000
060	1000000000	060	1000000000	060	1000000000
061	1000000000	061	1000000000	061	1000000000
062	1000000000	062	1000000000	062	1000000000
063	1000000000	063	1000000000	063	1000000000
064	1000000000	064	1000000000	064	1000000000
065	1000000000	065	1000000000	065	1000000000
066	1000000000	066	1000000000	066	1000000000
067	1000000000	067	1000000000	067	1000000000
068	1000000000	068	1000000000	068	1000000000
069	1000000000	069	1000000000	069	1000000000
070	1000000000	070	1000000000	070	1000000000
071	1000000000	071	1000000000	071	1000000000
072	1000000000	072	1000000000	072	1000000000
073	1000000000	073	1000000000	073	1000000000
074	1000000000	074	1000000000	074	1000000000
075	1000000000	075	1000000000	075	1000000000
076	1000000000	076	1000000000	076	1000000000
077	1000000000	077	1000000000	077	1000000000
078	1000000000	078	1000000000	078	1000000000
079	1000000000	079	1000000000	079	1000000000
080	1000000000	080	1000000000	080	1000000000
081	1000000000	081	1000000000	081	1000000000
082	1000000000	082	1000000000	082	1000000000
083	1000000000	083	1000000000	083	1000000000
084	1000000000	084	1000000000	084	1000000000
085	1000000000	085	1000000000	085	1000000000
086	1000000000	086	1000000000	086	1000000000
087	1000000000	087	1000000000	087	1000000000
088	1000000000	088	1000000000	088	1000000000
089	1000000000	089	1000000000	089	1000000000
090	1000000000	090	1000000000	090	1000000000
091	1000000000	091	1000000000	091	1000000000
092	1000000000	092	1000000000	092	1000000000
093	1000000000	093	1000000000	093	1000000000
094	1000000000	094	1000000000	094	1000000000
095	1000000000	095	1000000000	095	1000000000
096	1000000000	096	1000000000	096	1000000000
097	1000000000	097	1000000000	097	1000000000
098	1000000000	098	1000000000	098	1000000000
099	1000000000	099	1000000000	099	1000000000
100	1000000000	100	1000000000	100	1000000000

2004

REF NO	PART NO.	REF NO	PART NO.	REF NO	PART NO.
001	1000000000	001	1000000000	001	1000000000
002	1000000000	002	1000000000	002	1000000000
003	1000000000	003	1000000000	003	1000000000
004	1000000000	004	1000000000	004	1000000000
005	1000000000	005	1000000000	005	1000000000
006	1000000000	006	1000000000	006	1000000000
007	1000000000	007	1000000000	007	1000000000
008	1000000000	008	1000000000	008	1000000000
009	1000000000	009	1000000000	009	1000000000
010	1000000000	010	1000000000	010	1000000000
011	1000000000	011	1000000000	011	1000000000
012	1000000000	012	1000000000	012	1000000000
013	1000000000	013	1000000000	013	1000000000
014	1000000000	014	1000000000	014	1000000000
015	1000000000	015	1000000000	015	1000000000
016	1000000000	016	1000000000	016	1000000000
017	1000000000	017	1000000000	017	1000000000
018	1000000000	018	1000000000	018	1000000000
019	1000000000	019	1000000000	019	1000000000
020	1000000000	020	1000000000	020	1000000000
021	1000000000	021	1000000000	021	1000000000
022	1000000000	022	1000000000	022	1000000000
023	1000000000	023	1000000000	023	1000000000
024	1000000000	024	1000000000	024	1000000000
025	1000000000	025	1000000000	025	1000000000
026	1000000000	026	1000000000	026	1000000000
027	1000000000	027	1000000000	027	1000000000
028	1000000000	028	1000000000	028	1000000000
029	1000000000	029	1000000000	029	1000000000
030	1000000000	030	1000000000	030	1000000000
031	1000000000	031	1000000000	031	1000000000
032	1000000000	032	1000000000	032	1000000000
033	1000000000	033	1000000000	033	1000000000
034	1000000000	034	1000000000	034	1000000000
035	1000000000	035	1000000000	035	1000000000
036	1000000000	036	1000000000	036	1000000000
037	1000000000	037	1000000000	037	1000000000
038	1000000000	038	1000000000	038	1000000000
039	1000000000	039	1000000000	039	1000000000
040	1000000000	040	1000000000	040	1000000000
041	1000000000	041	1000000000	041	1000000000
042	1000000000	042	1000000000	042	1000000000
043	1000000000	043	1000000000	043	1000000000
044	1000000000	044	1000000000	044	1000000000
045	1000000000	045	1000000000	045	1000000000
046	1000000000	046	1000000000	046	1000000000
047	1000000000	047	1000000000	047	1000000000
048	1000000000	048	1000000000	048	1000000000
049	1000000000	049	1000000000	049	1000000000
050	1000000000	050	1000000000	050	1000000000
051	1000000000	051	1000000000	051	1000000000
052	1000000000	052	1000000000	052	1000000000
053	1000000000	053	1000000000	053	1000000000
054	1000000000	054	1000000000	054	1000000000
055	1000000000	055	1000000000	055	1000000000
056	1000000000	056	1000000000	056	1000000000
057	1000000000	057	1000000000	057	1000000000
058	1000000000	058	1000000000	058	1000000000
059	1000000000	059	1000000000	059	1000000000
060	1000000000	060	1000000000	060	1000000000
061	1000000000	061	1000000000	061	1000000000
062	1000000000	062	1000000000	062	1000000000
063	1000000000	063	1000000000	063	1000000000
064	1000000000	064	1000000000	064	1000000000
065	1000000000	065	1000000000	065	1000000000
066	1000000000	066	1000000000	066	1000000000
067	1000000000	067	1000000000	067	1000000000
068	1000000000	068	1000000000	068	1000000000
069	1000000000	069	1000000000	069	1000000000
070	1000000000	070	1000000000	070	1000000000
071	1000000000	071	1000000000	071	1000000000
072	1000000000	072	1000000000	072	1000000000
073	1000000000	073	1000000000	073	1000000000
074	1000000000	074	1000000000	074	1000000000
075	1000000000	075	1000000000	075	1000000000
076	1000000000	076	1000000000	076	1000000000
077	1000000000	077	1000000000	077	1000000000
078	1000000000	078	1000000000	078	1000000000
079	1000000000	079	1000000000	079	1000000000
080	1000000000	080	1000000000	080	1000000000
081	1000000000	081	1000000000	081	1000000000
082	1000000000	082	1000000000	082	1000000000
083	1000000000	083	1000000000	083	1000000000
084	1000000000	084	1000000000	084	1000000000
085	1000000000	085	1000000000	085	1000000000
086	1000000000	086	1000000000	086	1000000000
087	1000000000	087	1000000000	087	1000000000
088	1000000000	088	1000000000	088	1000000000
089	1000000000	089	1000000000	089	1000000000
090	1000000000	090	1000000000	090	1000000000
091	1000000000	091	1000000000	091	1000000000
092	1000000000	092	1000000000	092	1000000000
093	1000000000	093	1000000000	093	1000000000
094	1000000000	094	1000000000	094	1000000000
095	1000000000	095	1000000000	095	1000000000
096	1000000000	096	1000000000	096	1000000000
097	1000000000	097	1000000000	097	1000000000
098	1000000000	098	1000000000	098	1000000000
099	1000000000	099	1000000000	099	1000000000
100	1000000000	100	1000000000	100	1000000000

2005

REF NO	PART NO.	REF NO	PART NO.	REF NO	PART NO.
001	1000000000	001	1000000000	001	1000000000
002	1000000000	002	1000000000	002	1000000000
003	1000000000	003	1000000000	003	1000000000
004	1000000000	004	1000000000	004	1000000000
005	1000000000	005	1000000000	005	1000000000
006	1000000000	006	1000000000	006	1000000000
007	1000000000	007	1000000000	007	1000000000
008	1000000000	008	1000000000	008	1000000000
009	1000000000	009	1000000000	009	1000000000
010	1000000000	010	1000000000	010	1000000000
011	1000000000	011	1000000000	011	1000000000
012	1000000000	012	1000000000	012	1000000000
013	1000000000	013	1000000000	013	1000000000
014	1000000000	014	1000000000	014	1000000000
015	1000000000	015	1000000000	015	1000000000
016	1000000000	016	1000000000	016	1000000000
017	1000000000	017	1000000000	017	1000000000
018	1000000000	018	1000000000	018	1000000000
019	1000000000	019	1000000000	019	1000000000
020	1000000000	020	1000000000	020	1000000000
021	1000000000	021	1000000000	021	1000000000
022	1000000000	022	1000000000	022	1000000000
023	1000000000	023	1000000000	023	1000000000
024	1000000000	024	1000000000	024	1000000000
025	1000000000	025	1000000000	025	1000000000
026	1000000000	026	1000000000	026	1000000000
027	1000000000	027	1000000000	027	1000000000
028	1000000000	028	1000000000	028	1000000000
029	1000000000	029	1000000000	029	1000000000
030	1000000000	030	1000000000	030	1000000000
031	1000000000	031	1000000000	031	1000000000
032	1000000000	032	1000000000	032	1000000000
033	1000000000	033	1000000000	033	1000000000
034	1000000000	034	1000000000	034	1000000000
035	1000000000	035	1000000000	035	1000000000
036	1000000000	036	1000000000	036	1000000000
037	1000000000	037	1000000000	037	1000000000
038	1000000000	038	1000000000	038	1000000000
039	1000000000	039	1000000000	039	1000000000
040	1000000000	040	1000000000	040	1000000000
041	1000000000	041	1000000000	041	1000000000
042	1000000000	042	1000000000	042	1000000000
043	1000000000	043	1000000000	043	1000000000
044	1000000000	044	1000000000	044	1000000000
045	1000000000	045	1000000000	045	1000000000
046	1000000000	046	1000000000	046	1000000000
047	1000000000	047	1000000000	047	1000000000
048	1000000000	048	1000000000	048	1000000000
049	1000000000	049	1000000000	049	1000000000
050	1000000000	050	1000000000	050	1000000000
051	1000000000	051	1000000000	051	1000000000
052	1000000000	052	1000000000	052	1000000000
053	1000000000	053	1000000000	053	1000000000
054	1000000000	054	1000000000	054	1000000000
055	1000000000	055	1000000000	055	1000000000
056	1000000000	056	1000000000	056	1000000000
057	1000000000	057	1000000000	057	1000000000
058	1000000000	058	1000000000	058	1000000000
059	1000000000	059	1000000000	059	1000000000
060	1000000000	060	1000000000	060	1000000000
061	1000000000	061	1000000000	061	1000000000
062	1000000000	062	1000000000	062	1000000000
063	1000000000	063	1000000000	063	1000000000
064	1000000000	064	1000000000	064	1000000000
065	1000000000	065	1000000000	065	1000000000
066	1000000000	066	1000000000	066	1000000000
067	1000000000	067	1000000000	067	1000000000
068	1000000000	068	1000000000	068	1000000000
069	1000000000	069	1000000000	069	1000000000
070	1000000000	070	1000000000	070	1000000000
071	1000000000	071	1000000000	071	1000000000
072	1000000000	072	1000000000	072	1000000000
073	1000000000	073	1000000000	073	1000000000
074	1000000000	074	1000000000	074	1000000000
075	1000000000	075	1000000000	075	1000000000
076	1000000000	076	1000000000	076	1000000000
077	1000000000	077	1000000000	077	1000000000
078	1000000000	078	1000000000	078	1000000000
079	1000000000	079	1000000000	079	1000000000
080	1000000000	080	1000000000	080	1000000000
081	1000000000	081	1000000000	081	1000000000
082	1000000000	082	1000000000	082	1000000000
083	1000000000	083	1000000000	083	1000000000
084	1000000000	084	1000000000	084	1000000000
085	1000000000	085	1000000000	085	1000000000
086	1000000000	086	1000000000	086	1000000000
087	1000000000	087	1000000000	087	1000000000
088	1000000000	088	1000000000	088	1000000000
089	1000000000	089	1000000000	089	1000000000
090	1000000000	090	1000000000	090	1000000000
091	1000000000	091	1000000000	091	1000000000
092	1000000000	092	1000000000	092	1000000000
093	1000000000	093	1000000000	093	1000000000
094	1000000000	094	1000000000	094	1000000000
095	1000000000	095	1000000000	095	1000000000
096	1000000000	096	1000000000	096	1000000000
097	1000000000	097	1000000000	097	1000000000
098	1000000000	098	1000000000	098	1000000000
099	1000000000	099	1000000000	099	1000000000
100	1000000000	100	1000000000	100	1000000000

2006

REF NO	PART NO.	REF NO	PART NO.	REF NO	PART NO.
001	1000000000	001	1000000000	001	1000000000
002	1000000000	002	1000000000	002	1000000000
003	1000000000	003	1000000000	003	1000000000
004	1000000000	004	1000000000	004	1000000000
005	1000000000	005	1000000000	005	1000000000
006	1000000000	006	1000000000	006	1000000000
007	1000000000	007	1000000000	007	1000000000
008	1000000000	008	1000000000	008	1000000000
009	1000000000	009	1000000000	009	1000000000
010	1000000000	010	1000000000	010	1000000000
011	1000000000	011	1000000000	011	1000000000
012	1000000000	012	1000000000	012	1000000000
013	1000000000	013	1000000000	013	1000000000
014	1000000000	014	1000000000	014	1000000000
015	1000000000	015	1000000000	015	1000000000
016	1000000000	016	1000000000	016	1000000000
017	1000000000	017	1000000000	017	1000000000
018	1000000000	018	1000000000	018	1000000000
019	1000000000	019	1000000000	019	1000000000
020	1000000000	020	1000000000	020	1000000000
021	1000000000	021	1000000000	021	1000000000
022	1000000000	022	1000000000	022	1000000000
023	1000000000	023	1000000000	023	1000000000
024	1000000000	024	1000000000	024	1000000000
025	1000000000	025	1000000000	025	1000000000
026	1000000000	026	1000000000	026	1000000000
027	1000000000	027	1000000000	027	1000000000
028	1000000000	028	1000000000	028	1000000000
029	1000000000	029	1000000000	029	1000000000
030	1000000000	030	1000000000	030	1000000000
031	1000000000	031	1000000000	031	1000000000
032	1000000000	032	1000000000	032	1000000000
033	1000000000	033	1000000000	033	1000000000
034	1000000000	034	1000000000	034	1000000000
035	1000000000	035	1000000000	035	1000000000
036	1000000000	036	1000000000	036	1000000000
037	1000000000	037	1000000000	037	1000000000
038	1000000000	038	1000000000	038	1000000000
039	1000000000	039	1000000000	039	1000000000
040	1000000000	040	1000000000	040	1000000000
041	1000000000	041	1000000000	041	1000000000
042	1000000000	042	1000000000	042	1000000000
043	1000000000	043	1000000000	043	1000000000
044	1000000000	044	1000000000	044	1000000000
045	1000000000	045	1000000000	045	1000000000
046	1000000000	046	1000000000	046	1000000000
047	1000000000	047	1000000000	047	1000000000
048	1000000000	048	1000000000	048	1000000000
049	1000000000	049	1000000000	049	1000000000
050	1000000000	050	1000000000	050	1000000000
051	1000000000	051	1000000000	051	1000000000
052	1000000000	052	1000000000	052	1000000000
053	1000000000	053	1000000000	053	1000000000
054	1000000000	054	1000000000	054	1000000000
055	1000000000	055	1000000000	055	1000000000
056	1000000000	056	1000000000	056	1000000000
057	1000000000	057	1000000000	057	1000000000
058	1000000000	058	1000000000	058	1000000000
059	1000000000	059	1000000000	059	1000000000
060	1000000000	060	1000000000	060	1000000000
061	1000000000	061	1000000000	061	1000000000
062	1000000000	062	1000000000	062	1000000000
063	1000000000	063	1000000000	063	1000000000
064	1000000000	064	1000000000	064	1000000000
065	1000000000	065	1000000000	065	1000000000
066	1000000000	066	1000000000	066	1000000000
067	1000000000	067	1000000000	067	1000000000
068	1000000000	068	1000000000	068	1000000000
069	1000000000	069	1000000000	069	1000000000
070	1000000000	070	1000000000	070	1000000000
071	1000000000	071	1000000000	071	1000000000
072	1000000000	072	1000000000	072	1000000000
073	1000000000	073	1000000000	073	1000000000
074	1000000000	074	1000000000	074	1000000000
075	1000000000	075	1000000000	075	1000000000
076	1000000000	076	1000000000	076	1000000000
077	1000000000	077	1000000000	077	1000000000
078	1000000000	078	1000000000	078	1000000000
079	1000000000	079	1000000000	079	1000000000
080	1000000000	080	1000000000	080	1000000000
081	1000000000	081	1000000000	081	1000000000
082	1000000000	082	1000000000	082	1000000000
083	1000000000	083	1000000000	083	1000000000
084	1000000000	084	1000000000	084	1000000000
085	1000000000	085	1000000000	085	1000000000
086	1000000000	086	1000000000	086	1000000000
087	1000000000	087	1000000000	087	1000000000
088	1000000000	088	1000000000	088	1000000000
089	1000000000	089	1000000000	089	1000000000
090	1000000000	090	1000000000	090	1000000000
091	1000000000	091	1000000000	091	1000000000
092	1000000000	092	1000000000	092	1000000000
093	1000000000	093	1000000000	093	1000000000
094	1000000000	094	1000000000	094	1000000000
095	1000000000	095	1000000000	095	1000000000
096	1000000000	096	1000000000	096	1000000000
097	1000000000	097	1000000000	097	1000000000
098	1000000000	098	1000000000	098	1000000000
099	1000000000	099	1000000000	099	1000000000
100	1000000000	100	1000000000	100	1000000000

2007

REF NO	PART NO.	REF NO	PART NO.	REF NO	PART NO.
001	1000000000	001	1000000000	001	1000000000
002	1000000000	002	1000000000	002	1000000000
003	1000000000	003	1000000000	003	1000000000
004	1000000000	004	1000000000	004	1000000000
005	1000000000	005	1000000000	005	1000000000
006	1000000000	006	1000000000	006	1000000000
007	1000000000	007	1000000000	007	1000000000
008	1000000000	008	1000000000	008	1000000000
009	1000000000	009	1000000000	009	1000000000
010	1000000000	010	1000000000	010	1000000000
011	1000000000	011	1000000000	011	1000000000
012	1000000000	012	1000000000	012	1000000000
013	1000000000	013	1000000000	013	1000000000
014	1000000000	014	1000000000	014	1000000000
015	1000000000	015	1000000000	015	1000000000
016	1000000000	016	1000000000	016	1000000000
017	1000000000	017	1000000000	017	1000000000
018	1000000000	018	1000000000	018	1000000000
019	1000000000	019	1000000000	019	1000000000
020	1000000000	020	1000000000	020	1000000000
021	1000000000	021	1000000000	021	1000000000
022	1000000000	022	1000000000	022	1000000000
023	1000000000	023	1000000000	023	1000000000
024	1000000000	024	1000000000	024	1000000000
025	1000000000	025	1000000000	025	1000000000
026	1000000000	026	1000000000	026	1000000000
027	1000000000	027	1000000000	027	1000000000
028	1000000000	028	1000000000	028	1000000000
029	1000000000	029	1000000000	029	1000000000
030	1000000000	030	1000000000	030	1000000000
031	1000000000	031	1000000000	031	1000000000
032	1000000000	032	1000000000	032	1000000000
033	1000000000	033	1000000000	033	1000000000
034	1000000000	034	1000000000	034	1000000000
035	1000000000	035	1000000000	035	1000000000
036	1000000000	036	1000000000	036	1000000000
037	1000000000	037	1000000000	037	1000000000
038	1000000000	038	1000000000	038	1000000000
039	1000000000	039	1000000000	039	1000000000
040	1000000000	040	1000000000	040	1000000000
041	1000000000	041	1000000000	041	1000000000
042	1000000000	042	1000000000	042	1000000000
043	1000000000	043	1000000000	043	1000000000
044	1000000000	044	1000000000	044	1000000000
045	1000000000	045	1000000000	045	1000000000
046	1000000000	046	1000000000	046	1000000000
047	1000000000	047	1000000000	047	1000000000
048	1000000000	048	1000000000	048	1000000000
049	1000000000	049	1000000000