T25NH

Parts Catalog

목 차

1. Engine PART NO. EG

FIG ENGINE ASSY 7
FIG CYLINDER BLOCK 9
FIG GEAR HOUSING 11
FIG OIL SUMP 13
FIG CYLINDER HEAD & BONNET 15
FIG EXHAUST MANIFOLD 18
FIG CAMSHAFT & DRIVING GEAR 20
FIG CRANKSHAFT & PISTON 22
FIG LUB. OIL SYSTEM 24
FIG COOLING WATER SYSTEM 26
FIG FUEL INJECTION PUMP 28
FIG GOVERNOR 30
FIG FUEL INJECTION VALVE 32
FIG FUEL FILTER 34
FIG STARTING MOTOR 36
FIG GENERATOR 38
FIG ACCESORY 40

2. Engine Accessories PART NO. T2

FIG AIR CLEANER 43
FIG RADIATOR 45
FIG MUFFLER 47
FIG FUEL TANK & FUEL LINE 49
FIG ACCELERATOR 51
FIG OIL COOLER 53

3. Clutch/Brake/Steering PART NO. T3

FIG FLYWHEEL COVER 56
FIG SPEED CONTROL 58

FIG BRAKE 61
FIG BRAKE PEDAL & LINKAGE 63
FIG STEERING WHEEL & DASH COVER 65
FIG STEERING VALVE 67
FIG STEERING CYLINDER 69
FIG FRONT WHEEL 71
FIG REAR WHEEL 73

4. Transmission PART NO. T4

FIG INPUT SHAFT 76
FIG HST 78
FIG 4WD DRIVE GEAR 80
FIG RANGE GEARS 82
FIG P.T.O DRIVE SHAFT 84
FIG P.T.O SHAFT 86
FIG DIFF LOCK 88
FIG REAR TRANSMISSION CASE 90
FIG REAR AXLE HOUSINGS 92
FIG RANGE SHIFT LEVER 94
FIG P.T.O CHANGE LEVER 96
FIG 4WD CHANGE LEVER 98

5. Front Axle PART NO. T5

FIG FRAME 101
FIG FRONT DIFFERENTIAL GEARS & SHAFT 103
FIG FRONT AXLE HOUSING 105
FIG FRONT GEAR CASE (1) 107
FIG FRONT GEAR CASE (2) 109

6. Hydraulic/3P-Link PART NO. T6

FIG CYLINDER CASE 112
FIG LIFT ARM 114
FIG FLOW CONTROL VALVE 116
FIG CONTROL VALVE LINKAGE 118
FIG MAIN CONTROL VALVE 120

FIG POSITION LEVER LINKAGE 122
FIG GEAR PUMP 124
FIG HYDRAULIC HOSE (1) 126
FIG HYDRAULIC HOSE (2) 128
FIG PTO VALVE 130
FIG 3-POINT LINKAGE 132
FIG JOYSTICK LEVER 135
FIG HITCH & COVER 137
FIG REMOTE CONTROL VALVE 139

7. Sheet Metal & Cabin PART NO. T7

FIG BONNET 142
FIG DASH PANEL 144
FIG FLOOR 146
FIG SEAT 149
FIG ROPS 151
FIG CAB FRAME & DOOR(OPTION) 153
FIG FRONT GLASS(OPTION) 155
FIG SIDE & REAR GLASS(OPTION) 157
FIG ROOF(OPTION) 159
FIG HEATER(OPTION) 161
FIG INTERIOR PART(OPTION) 163
FIG SEAL(OPTION) 165
FIG FRONT & REAR MOUNTING(OPTION) 167

8. Electrical System PART NO. T8

FIG BATTERY & MOUNTING 170
FIG LIGHTS 172
FIG INSTRUMENT PANEL 174
FIG ELECTRIC SYSTEM 176
FIG HARNESS 178
FIG HARNESS 180

9. Label/Option PART NO. T9

FIG TOOL & ACCESSORY 183

FIG LABEL 185
FIG OPTION 187
FIG MID P.T.O OPTION 189

1. Engine PART NO. EG

FIG	ENGINE ASSY	7
FIG	CYLINDER BLOCK	9
FIG	GEAR HOUSING	11
FIG	OIL SUMP	13
FIG	CYLINDER HEAD & BONNET	15
FIG	EXHAUST MANIFOLD	18
FIG	CAMSHAFT & DRIVING GEAR	20
FIG	CRANKSHAFT & PISTON	22
FIG	LUB. OIL SYSTEM	24
FIG	COOLING WATER SYSTEM	26
FIG	FUEL INJECTION PUMP	28
FIG	GOVERNOR	30
FIG	FUEL INJECTION VALVE	32
FIG	FUEL FILTER	34
FIG	STARTING MOTOR	36
FIG	GENERATOR	38
FIG	ACCESORY	40

FIG T25NH	ENGINE ASSY	년/월 Year/Month 2021-12

ENGINE

NOTE	

FIG T25NH	ENGINE ASSY	년/월 Year/Month 2021-12

KEY NO		PART NO	DESCRIPTION	SPEC	QTY	REPAIR	EFFECTIVE DATE	REMARKS
	1	11811001100	ENGINE , 3TNV80F-NXDKTFX		1			

NOTE	

FIG T25NH	CYLINDER BLOCK	년/월 Year/Month 2021-12

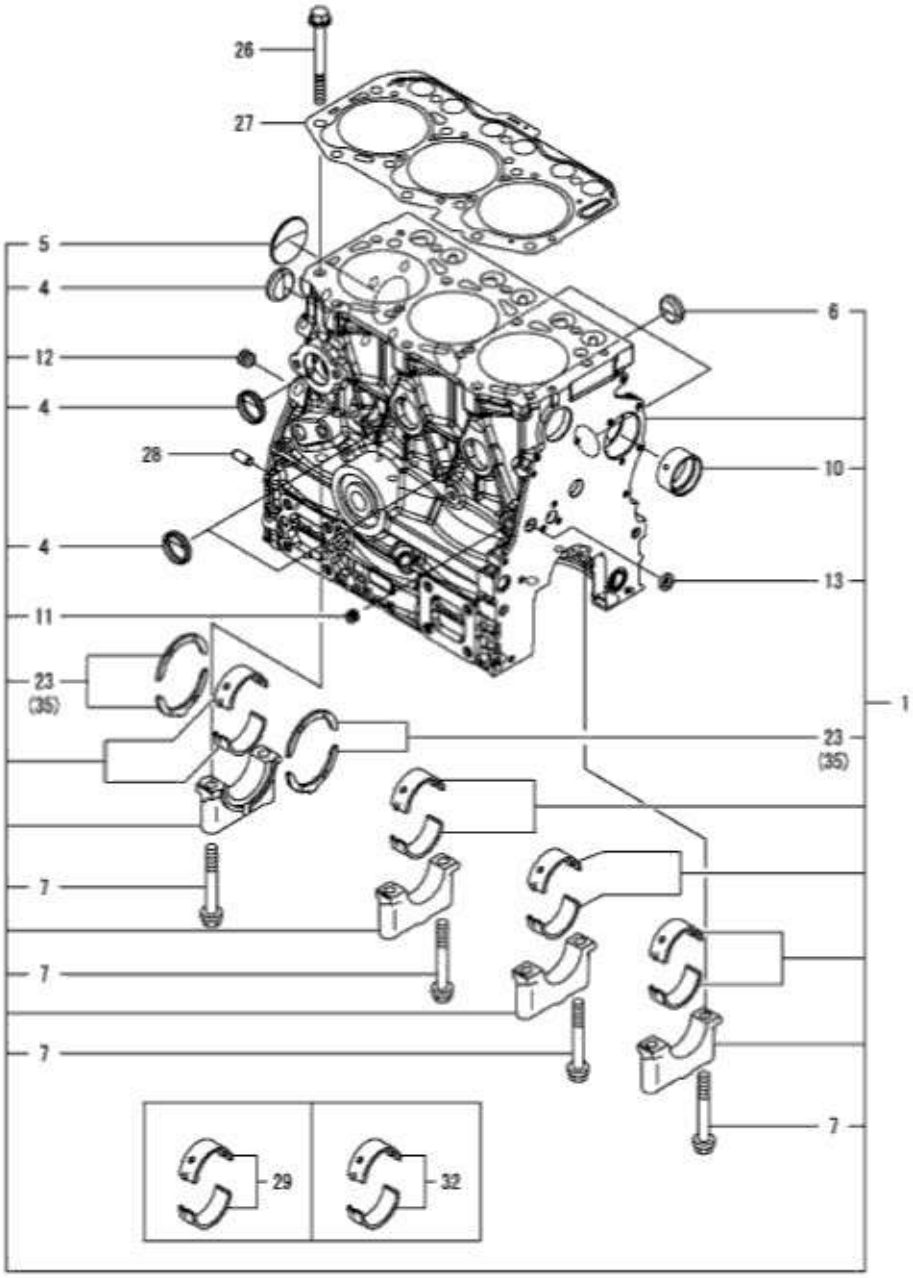

NOTE	

FIG T25NH	CYLINDER BLOCK	년/월 Year/Month 2021-12

KEY NO		PART NO	DESCRIPTION	SPEC	QTY	REPAIR	EFFECTIVE DATE	REMARKS
	1	119E00-01560	BLOCK ASSY, CYLINDER		1			
	4	105311-01090	PLUG, 30		4			
	5	119623-01250	PLUG, 45		1			
	6	119285-01990	PLUG, 25		3			
	7	119620-02020	BOLT, METAL CAP		8			
	10	119717-02411	BUSH, CAMSHAFT		1			
	11	124060-01050	PLUG, PT1/8		1			
	12	124160-01910	PLUG, PT1/4		1			
	13	27241-120000	PLUG, 12		1			
	23	119717-02930	METAL ASSY, THRUST		2			
	26	119810-01200	BOLT, CYLINDER HEAD		14			
	27	119E10-01330	GASKET SET, HEAD		1			
	28	129100-01580	PIN, PARALLEL 8X16		2			
	29	719717-02901	METAL ASSY, MAIN		4			
	32	719717-02911	METAL ASSY, MAIN .25		4			
	35	119810-02941	METAL ASSY, 0.25 OS		2			

NOTE	

FIG T25NH	GEAR HOUSING	년/월 Year/Month 2021-12

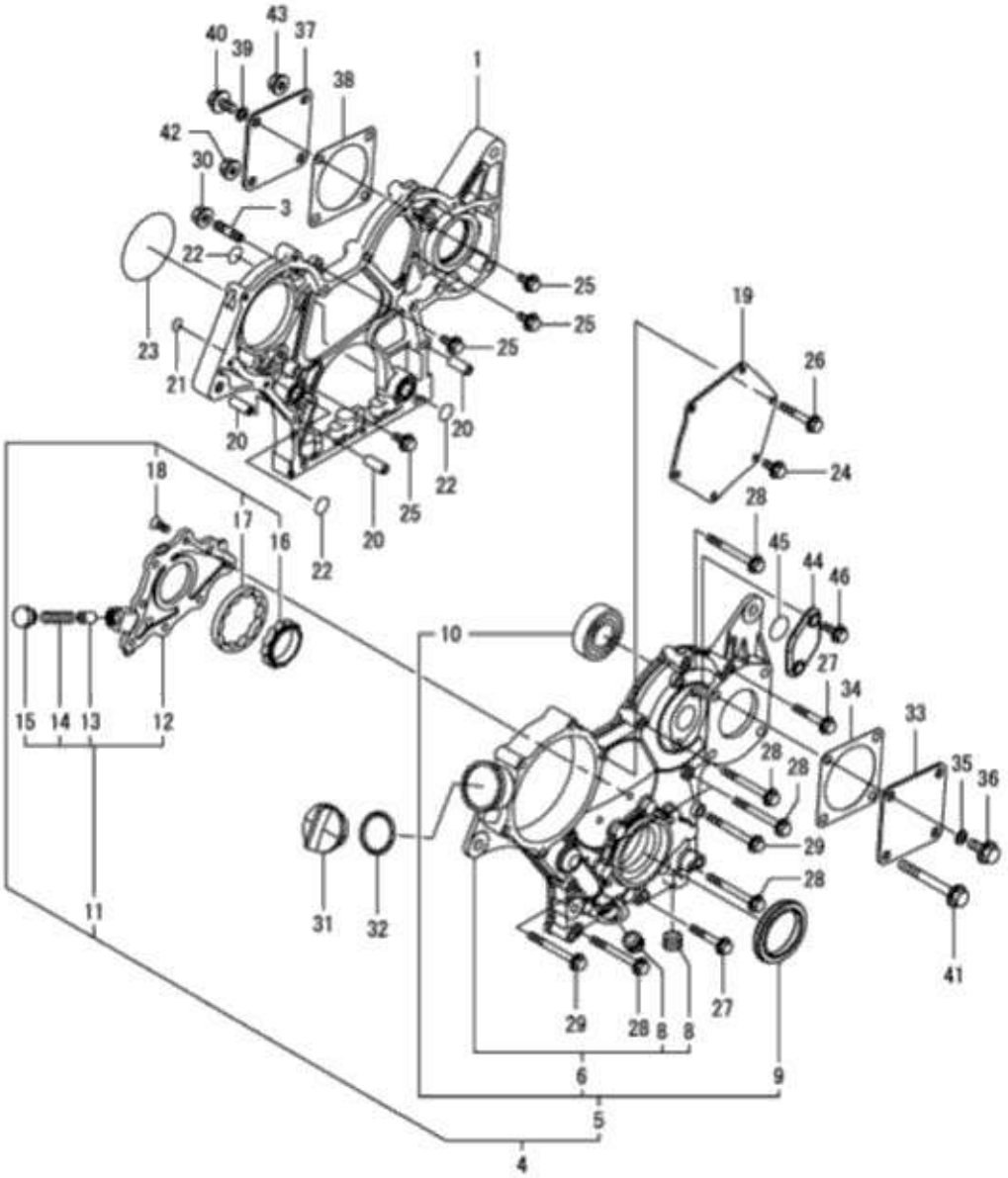

NOTE	

FIG T25NH	GEAR HOUSING	년/월 Year/Month 2021-12

KEY NO	PART NO	DESCRIPTION	SPEC	QTY	REPAIR	EFFECTIVE DATE	REMARKS
1	119740-01501	CASE, GEAR		1			
3	119717-01570	STUD		3			
4	119751-01590	COVER ASSY, CASE		1			
5	719751-01500	COVER ASSY, CASE		1			
6	119751-01521	COVER, GEAR CASE		1			
8	23876-030000	PLUG, R03		2			
9	119717-01800	SEAL, OIL		1			
10	24101-062024	"BEARING, BALL 6202"		1			
11	119717-32100	COVER ASSY, PUMP		1			
12	119717-32080	COVER, OIL PUMP		1			
13	129900-32130	VALVE, RELIEF		1			
14	129001-32320	SPRING		1			
15	129001-32330	PLUG		1			
16	119717-32110	ROTOR, INNER		1			
17	119717-32120	ROTOR, OUTER		1			
18	119802-32130	SCREW, M6X16		8			
19	119717-01750	COVER, PUMP		1			
20	119660-01911	PIPE, KNOCK 6X17		4			
21	119624-32040	O-RING, P12.0		1			
22	119717-32050	O-RING, P17.0		3			
23	121850-51960	O-RING, FUEL PUMP		1			
24	26106-060122	BOLT, M6X 12 PLATED		1			
25	26106-060162	BOLT, M6X 16 PLATED		4			
26	26106-060402	BOLT, M6X 40 PLATED		4			
27	26106-060402	BOLT, M6X 40 PLATED		2			
28	26106-060602	BOLT, M6X 60 PLATED		7			
29	26106-060652	BOLT, M6X 65 PLATED		2			
30	26306-080002	NUT, M8		3			
31	124160-01751	CAP, FILLER		1			
32	24311-000320	"O-RING, 1AP32.0"		1			
33	124240-01871	COVER,HYDRAULIC PUMP		1			
34	129C26-01890	GASKET, PUMP		1			
35	22190-080002	WASHER, SEAL 8		1			
36	26106-080142	BOLT, M8X 14 PLATED		1			
37	124240-01871	COVER,HYDRAULIC PUMP		1			
38	129C26-01890	GASKET, PUMP		1			
39	22190-080002	WASHER, SEAL 8		1			
40	26106-080142	BOLT, M8X 14 PLATED		1			
41	26106-080702	BOLT, M8X 70 PLATED		3			
42	26306-080002	NUT, M8		1			
43	26306-080002	NUT, M8		2			
44	121023-01551	COVER, TACHOMETER		1			
45	24341-000240	O-RING, 1AS24.0		1			
46	26106-060162	BOLT, M6X 16 PLATED		2			

NOTE	

FIG T25NH	OIL SUMP	년/월 Year/Month 2021-12

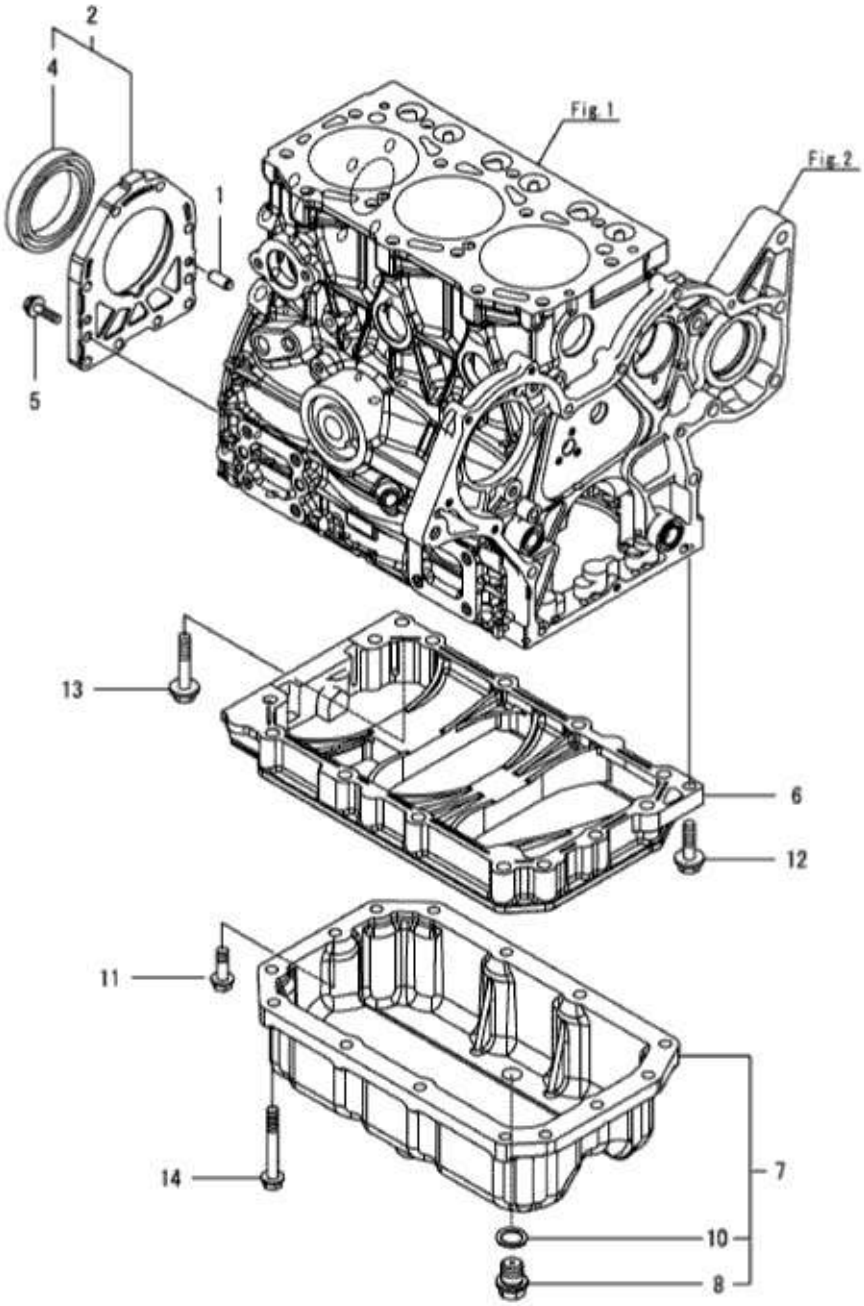

NOTE	

FIG T25NH	OIL SUMP	년/월 Year/Month 2021-12

KEY NO		PART NO	DESCRIPTION	SPEC	QTY	REPAIR	EFFECTIVE DATE	REMARKS
	1	119620-01620	PIN, PARALLEL M6X10		2			
	2	119718-01640	CASE ASSY, OIL SEAL		1			
	4	119734-02220	SEAL, OIL WHEEL SIDE		1			
	5	26106-060222	BOLT, M6X 22 PLATED		10			
	6	119717-01720	SPACER, OIL PAN		1			
	7	119E10-01790	OIL PAN ASSY		1			
	8	105425-01690	PLUG, DRAIN M16		2			
	10	22190-160002	WASHER, SEAL 16		2			
	11	26106-080252	BOLT, M8X 25 PLATED		1			
	12	26106-080302	FLANGE BOLT		1			
	13	26106-080452	BOLT, M8X 45 PLATED		1			
	14	26106-080602	BOLT, M8X 60 PLATED		13			

NOTE	

FIG T25NH	CYLINDER HEAD & BONNET	년/월 Year/Month 2021-12

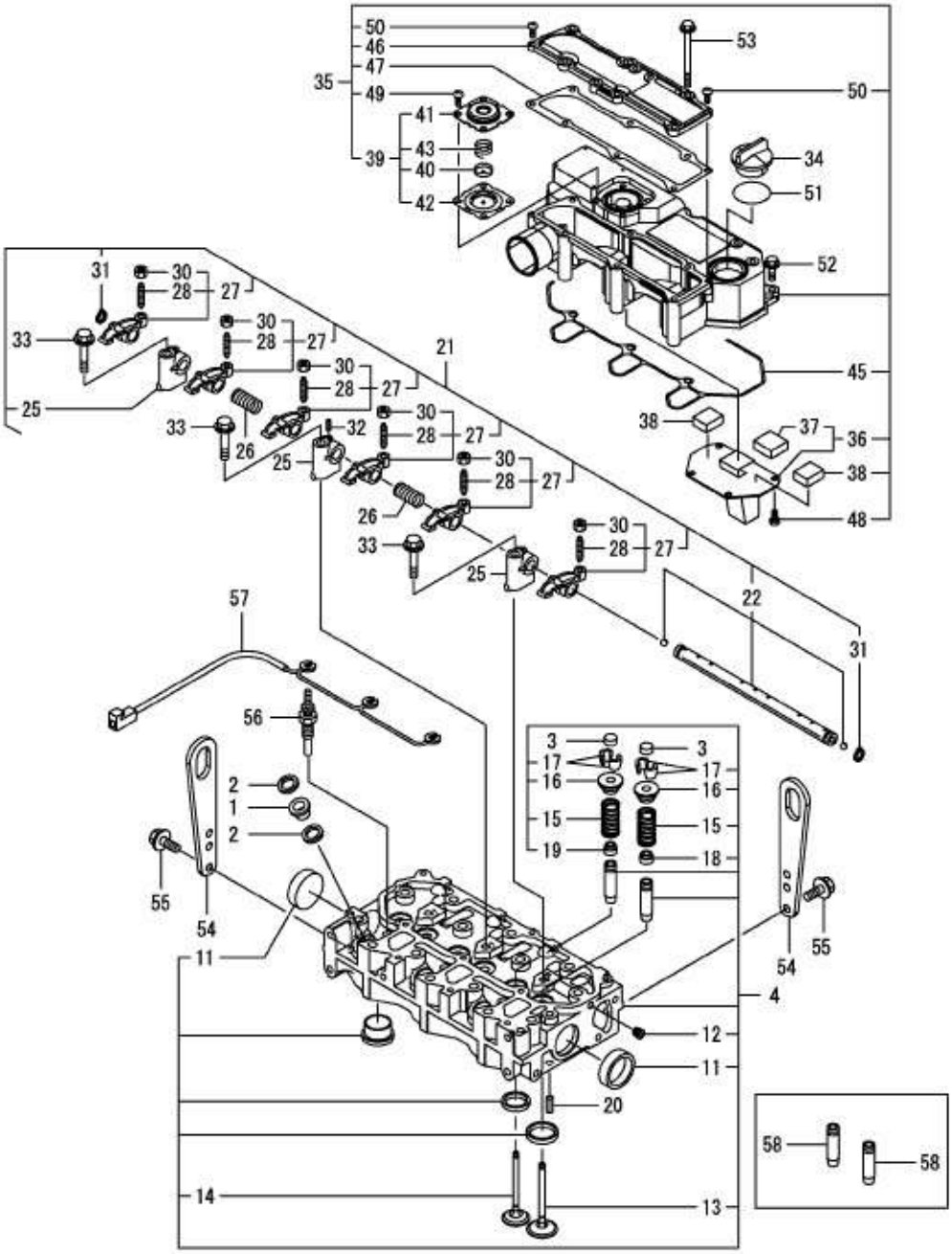

NOTE	

FIG T25NH	CYLINDER HEAD & BONNET	년/월 Year/Month 2021-12

KEY NO		PART NO	DESCRIPTION	SPEC	QTY	REPAIR	EFFECTIVE DATE	REMARKS
	1	129901-11450	PROTECTOR, NOZZLE		3			
	2	119600-11460	GASKET, NOZZLE		6			
	3	105010-11490	CAP, VALVE		6			
	4	119E10-11750	HEAD ASSY, CYLINDER		1			
	11	119285-11990	PLUG, 35		2			
	12	23876-005000	PLUG, R005		1			
	13	119E10-11100	VALVE, INTAKE		3			
	14	119E10-11110	VALVE, EXHAUST		3			
	15	119717-11131	SPRING, VALVE		6			
	16	129508-11180	RETAINER, SPRING		6			
	17	119717-11190	COTTER, VALVE		12			
	18	119717-11340	SEAL, VALVE STEM		3			
	19	119717-11350	SEAL, VALVE STEM		3			
	20	22351-060012	"PIN, SPRING 6.0X12"		2			
	21	119717-11200	SUPPORT ASSY, ROCKER		1			
	22	119717-11240	SHAFT ASSY, ARM		1			
	25	119717-11260	SUPPORT, ROCKER ARM		3			
	26	119620-11280	SPRING, SHAFT		2			
	27	119717-11650	ARM ASSY, ROCKER INT		6			
	28	129150-11230	SCREW, VALVE ADJUST		6			
	30	129150-11750	NUT, M8XP1.0		6			
	31	22242-000120	RING, 12		2			
	32	119260-11270	SCREW		1			
	33	26106-080402	BOLT, M8X 40 PLATED		3			
	34	124160-01751	CAP, FILLER		1			
	35	119717-11381	BONNET ASSY, HEAD		1			
	36	119717-03031	PLATE, BAFFLE		1			
	37	119717-03070	BAFFLE, BREATHER		1			
	38	119717-03070	BAFFLE, BREATHER		2			
	39	119802-03100	DIAPHRAGM ASSY		1			
	40	119802-03110	PLATE, DIAPHRAGM		1			
	41	119802-03121	COVER, DIAPHRAGM		1			
	42	119802-03131	DIAPHRAGM, BREATHER		1			
	43	119802-03141	SPRING, DIAPHRAGM		1			
	45	119718-11310	GASKET, BONNET		1			
	46	119717-11320	COVER, BONNET		1			
	47	119717-11331	GASKET, BONNET COVER		1			
	48	22857-500100	SCREW, 5X10		4			
	49	22857-500100	SCREW, 5X10		4			
	50	22857-500160	SCREW, 5X16		2			
	51	24311-000320	"O-RING, 1AP32.0"		1			
	52	26106-060202	BOLT, M6X 20 PLATED		3			
	53	26106-060752	BOLT, M6X 75 PLATED		6			
	54	129900-07900	LIFTER, ENGINE		2			
	55	26106-080162	"BOLT, M8X 16 PLATED"		4			

NOTE

FIG T25NH	CYLINDER HEAD & BONNET	년/월 Year/Month 2021-12

KEY NO		PART NO	DESCRIPTION	SPEC	QTY	REPAIR	EFFECTIVE DATE	REMARKS
	56	119717-77801	PLUG, GLOW		3			
	57	119717-77820	CONNECTOR, GLOW PLUG		1			
	58	119717-11800	GUIDE, VALVE		6			

NOTE	

FIG T25NH	EXHAUST MANIFOLD	년/월 Year/Month 2021-12

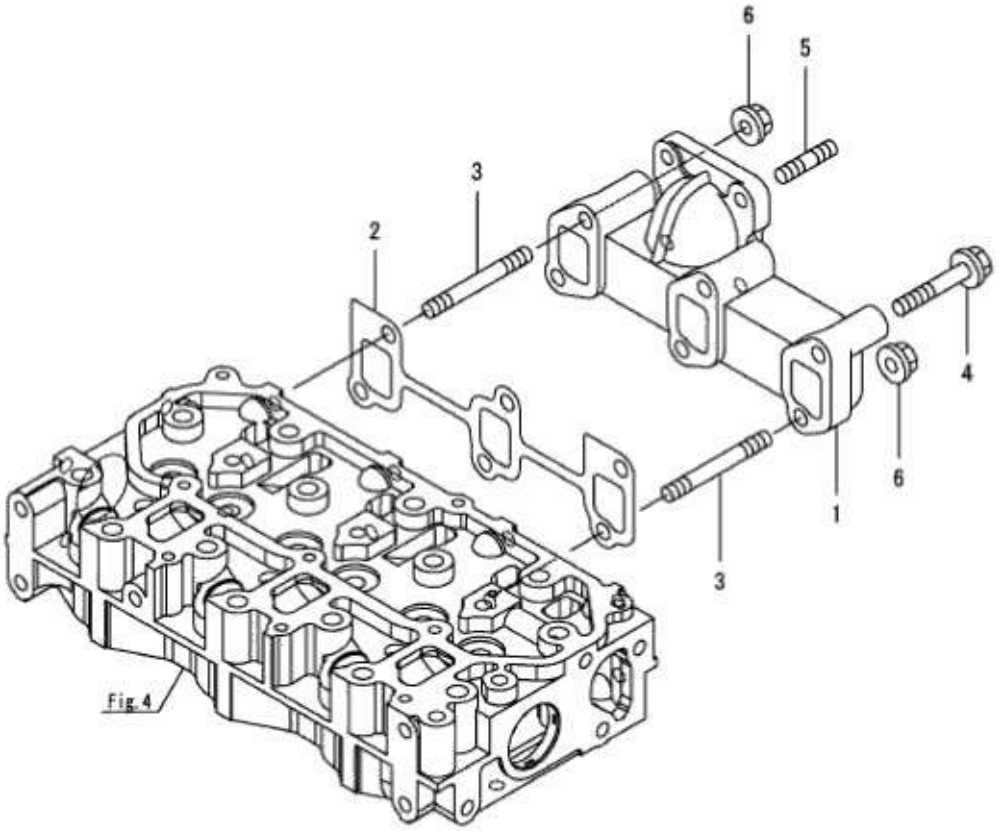

NOTE	

FIG T25NH	EXHAUST MANIFOLD	년/월 Year/Month 2021-12

KEY NO		PART NO	DESCRIPTION	SPEC	QTY	REPAIR	EFFECTIVE DATE	REMARKS
	1	119718-13100	MANIFOLD, EXHAUST		1			
	2	119717-13110	GASKET, MANIFOLD		1			
	3	119717-13600	STUD, M8X50		2			
	4	129E00-13610	BOLT, M8X50 10.9		4			
	5	119131-18320	STUD, M8X22		4			
	6	26306-080002	NUT, M8		2			

NOTE	

FIG T25NH	CAMSHAFT & DRIVING GEAR	년/월 Year/Month 2021-12

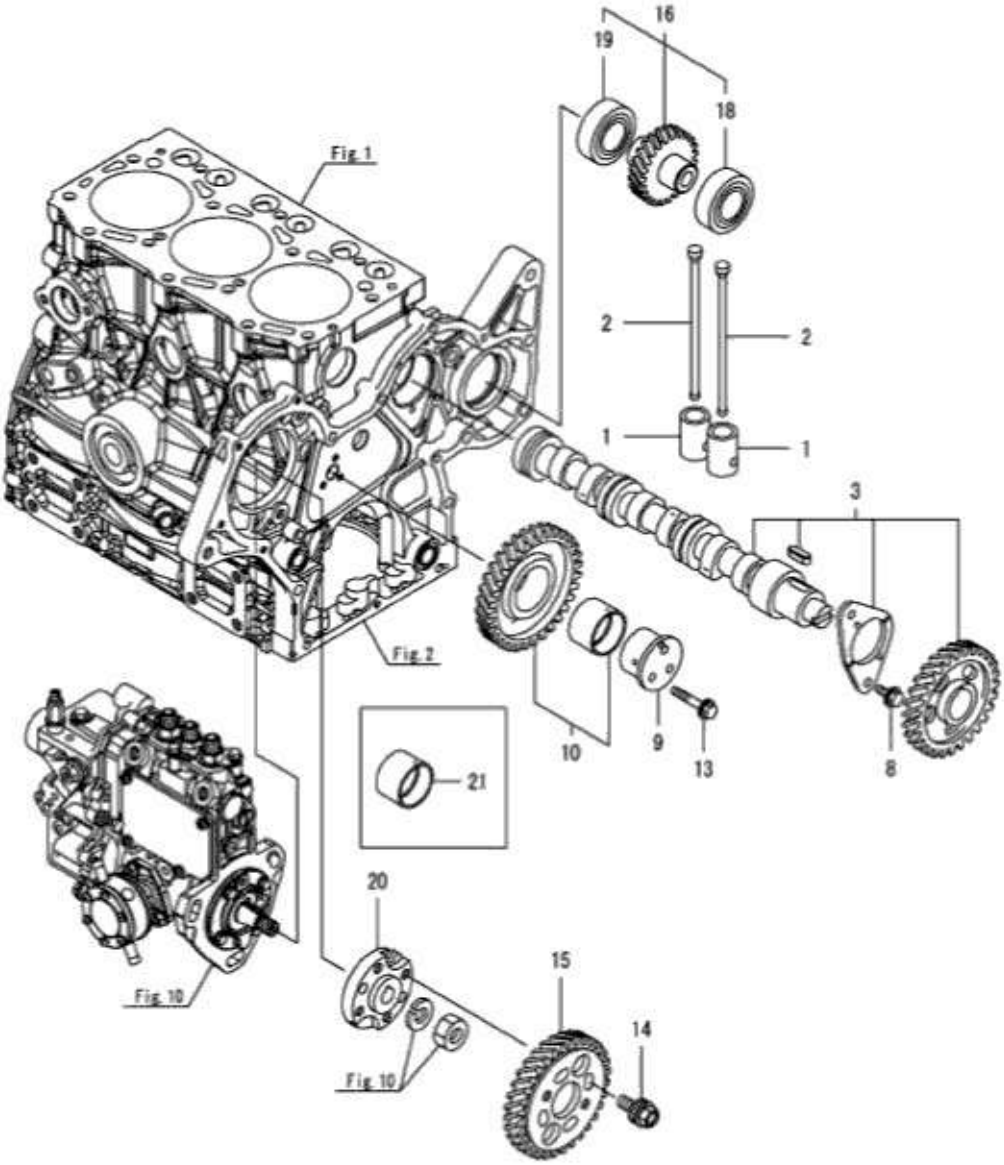

NOTE	

FIG T25NH	CAMSHAFT & DRIVING GEAR	년/월 Year/Month 2021-12

KEY NO		PART NO	DESCRIPTION	SPEC	QTY	REPAIR	EFFECTIVE DATE	REMARKS
	1	119620-14200	TAPPET		6			
	2	119717-14400	ROD, PUSH		6			
	3	119717-14581	CAMSHAFT ASSY		1			
	8	26106-060122	BOLT, M6X 12 PLATED		2			
	9	119717-25050	SHAFT, IDLE GEAR		1			
	10	119717-25101	GEAR ASSY, IDLE		1			
	13	26106-060352	BOLT, M6X 35 PLATED		3			
	14	129150-25301	BOLT, INJECTION PUMP		4			
	15	119717-25930	GEAR, PUMP		1			
	16	119717-26000	GEAR ASSY, PUMP		1			
	18	129350-26490	BEARING, BALL 16005		1			
	19	24104-060054	BALL BEARING #6005UU		1			
	20	119717-51150	FLANGE, CAMSHAFT		1			
	21	119717-25911	BUSH, IDLE GEAR		1			

NOTE	

FIG T25NH	CRANKSHAFT & PISTON	년/월 Year/Month 2021-12

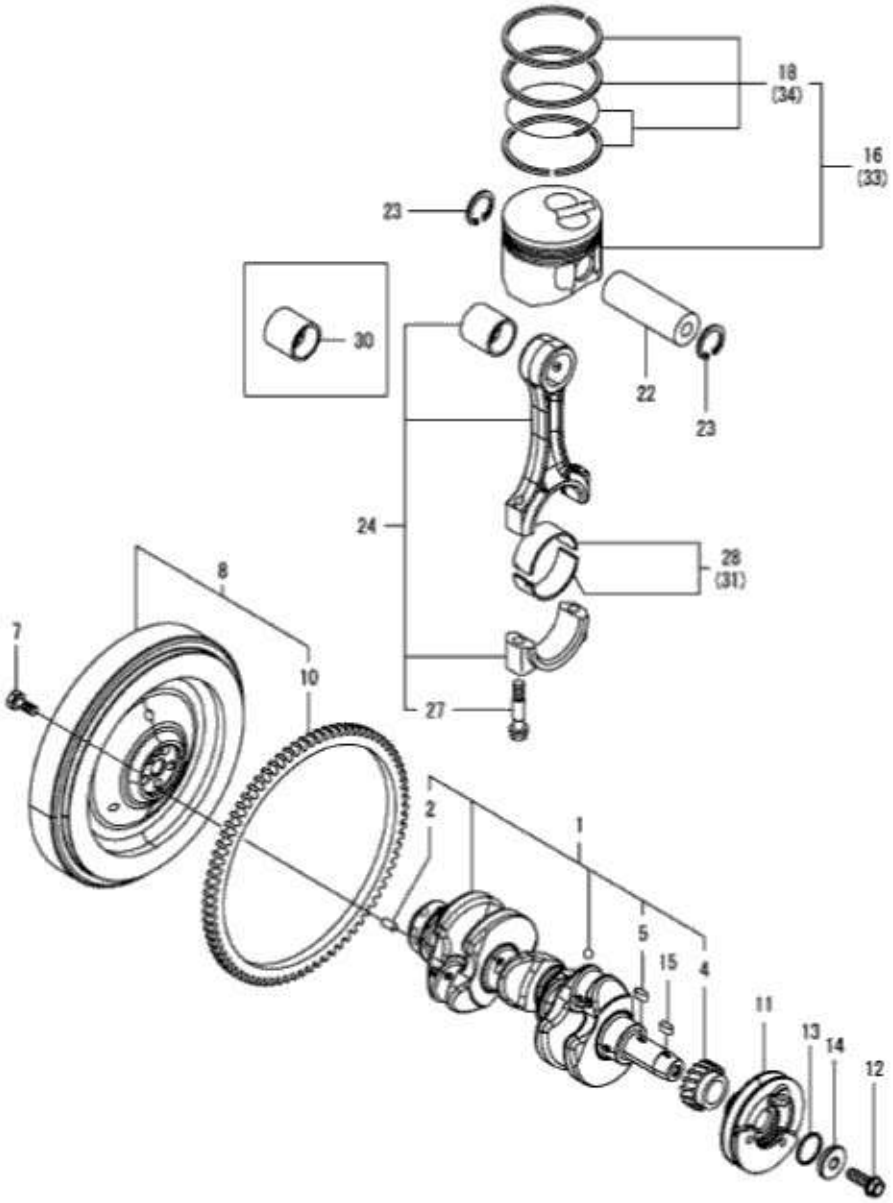

NOTE	

FIG T25NH	CRANKSHAFT & PISTON	년/월 Year/Month 2021-12

KEY NO		PART NO	DESCRIPTION	SPEC	QTY	REPAIR	EFFECTIVE DATE	REMARKS
	1	119E10-21700	CRANKSHAFT ASSY		1			
	2	129100-01580	PIN, PARALLEL 8X16		1			
	4	119717-21200	GEAR, CRANKSHAFT		1			
	5	22512-040120	KEY, 4X 12		1			
	7	121111-21501	BOLT, FLYWHEEL		5			
	8	119E10-21590	FLYWHEEL ASSY		1			
	10	119865-21600	GEAR, RING Z=116		1			
	11	119C10-21650	V-PULLEY, CRANKSHAFT		1			
	12	119621-21681	BOLT, FLANGE 12X1.25		1			
	13	119C10-21931	PACKING, WASHER		1			
	14	119C10-21940	WASHER, V-PULLEY		1			
	15	22512-040120	KEY, 4X 12		1			
	16	119E11-22080	PISTON ASSY		3			
	18	119E10-22500	RING SET, PISTON		3			
	22	119E10-22300	PIN, PISTON		3			
	23	22252-000220	RING, 22		6			
	24	119E10-23001	ROD ASSY, CONNECTING		3			
	27	119717-23200	BOLT, CONNECTING ROD		6			
	28	119717-23601	METAL ASSY,CRANK PIN		3			
	30	119717-23911	BUSH, PISTON PIN		3			
	31	119717-23611	METAL ASSY, PIN .25		3			
	33	119E11-22900	PISTON ASSY, 0.25 OS		3			
	34	119E10-22550	RING SET, PISTON .25		3			

NOTE	

FIG T25NH	LUB. OIL SYSTEM	년/월 Year/Month 2021-12

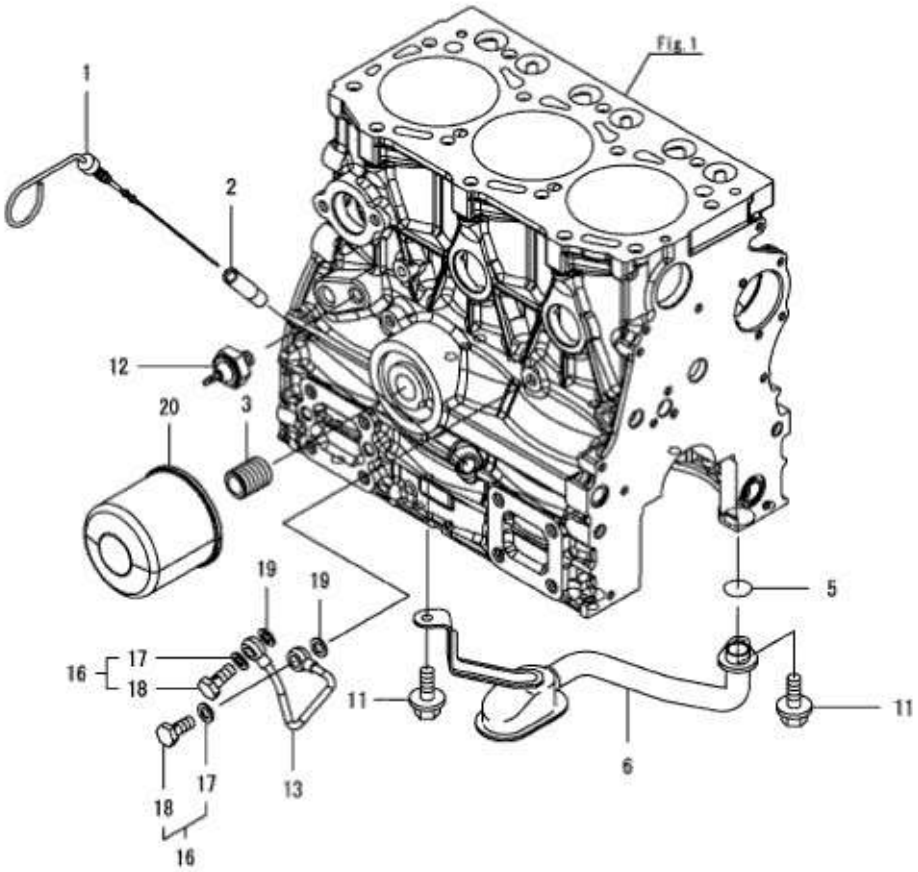

NOTE	

FIG T25NH	LUB. OIL SYSTEM	년/월 Year/Month 2021-12

KEY NO		PART NO	DESCRIPTION	SPEC	QTY	REPAIR	EFFECTIVE DATE	REMARKS
	1	119751-34830	DIPSTICK, LUB.OIL		1			
	2	121520-34810	GUIDE, DIPSTICK		1			
	3	119717-35140	STUD		1			
	5	119717-32060	O-RING, P15.0		1			
	6	119751-35080	PIPE ASSY, OIL INLET		1			
	11	26106-060102	BOLT, M6X 10 PLATED		2			
	12	114250-39450	SWITCH, HYDRAULIC		1			
	13	119717-39210	PIPE, PUMP		1			
	16	129005-59830	BOLT ASSY, JOINT M8		2			
	17	22190-080002	WASHER, SEAL 8		2			
	18	23857-030000	BOLT, JOINT 3		2			
	19	22190-080002	WASHER, SEAL 8		2			
	20	119305-35151	FILTER ASSY, D68XL65		1			

NOTE	

FIG T25NH	COOLING WATER SYSTEM	년/월 Year/Month 2021-12

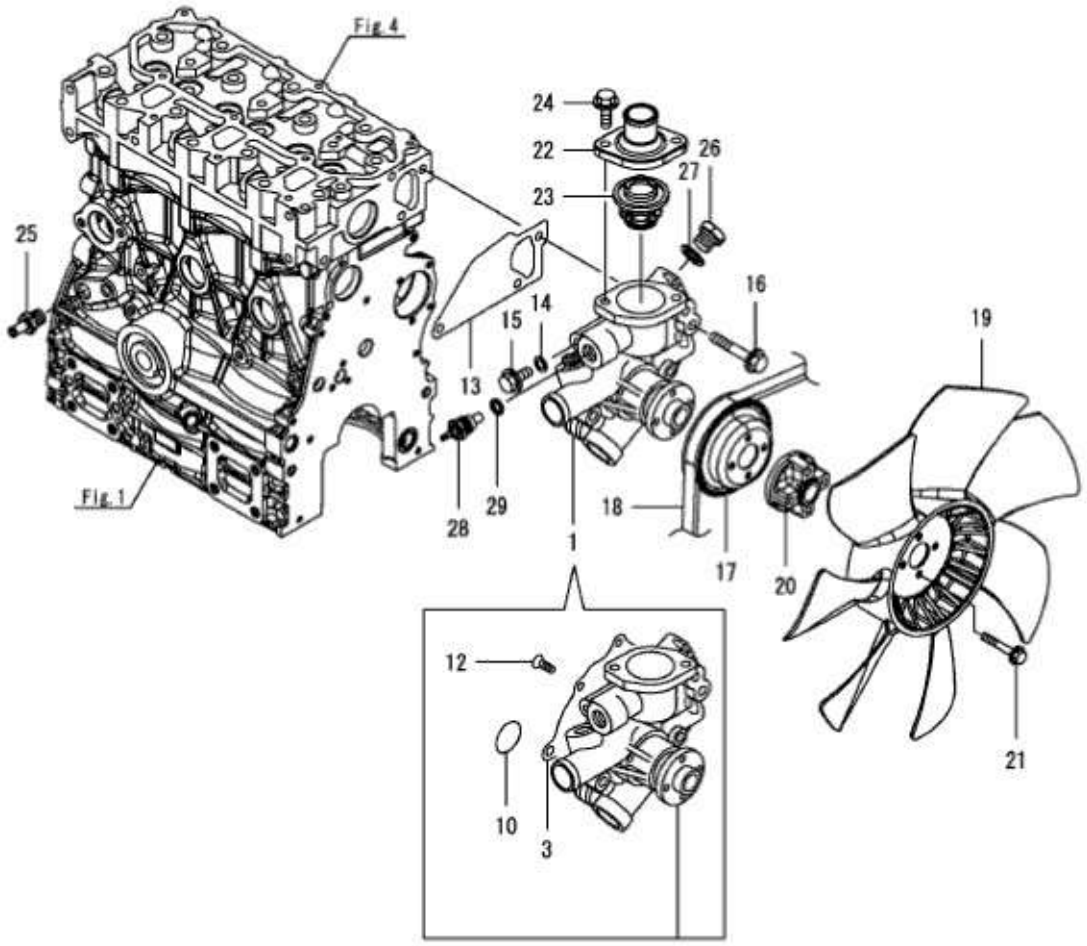

NOTE	

FIG T25NH	COOLING WATER SYSTEM	년/월 Year/Month 2021-12

KEY NO		PART NO	DESCRIPTION	SPEC	QTY	REPAIR	EFFECTIVE DATE	REMARKS
	1	119E10-42001	PUMP ASSY, CW		1			
	3	119717-42031	GASKET, WATER PUMP		1			
	10	119C10-42320	O-RING, 2028		1			
	12	26577-060122	SCREW, M6X12		4			
	13	119717-42020	GASKET, WATER PUMP		1			
	14	23414-080000	GASKET, 8X1.0		1			
	15	26106-080122	BOLT, M8X 12 PLATED		1			
	16	26106-080502	BOLT, M8X 50 PLATED		3			
	17	119717-42350	V-PULLEY, PUMP D=100		1			
	18	25152-003700	V-BELT, A37		1			
	19	119717-44740	FAN, COOLING D=335X7		1			
	20	171353-44760	SPACER, FAN 25MM		1			
	21	26106-060402	BOLT, M6X 40 PLATED		4			
	22	129350-49530	COVER, THERMOSTAT		1			
	23	119717-49800	THERMOSTAT, 71C		1			
	24	26106-080202	BOLT, M8X 20 PLATED		2			
	25	121550-49111	JOINT, PT1/4		1			
	26	121450-42450	PLUG, M16		1			
	27	124465-44950	GASKET, 16		1			
	28	124250-49351	SENSOR, WATER TEMP.		1			
	29	129150-49360	GASKET, 10		1			

NOTE	

FIG T25NH	FUEL INJECTION PUMP	년/월 Year/Month 2021-12

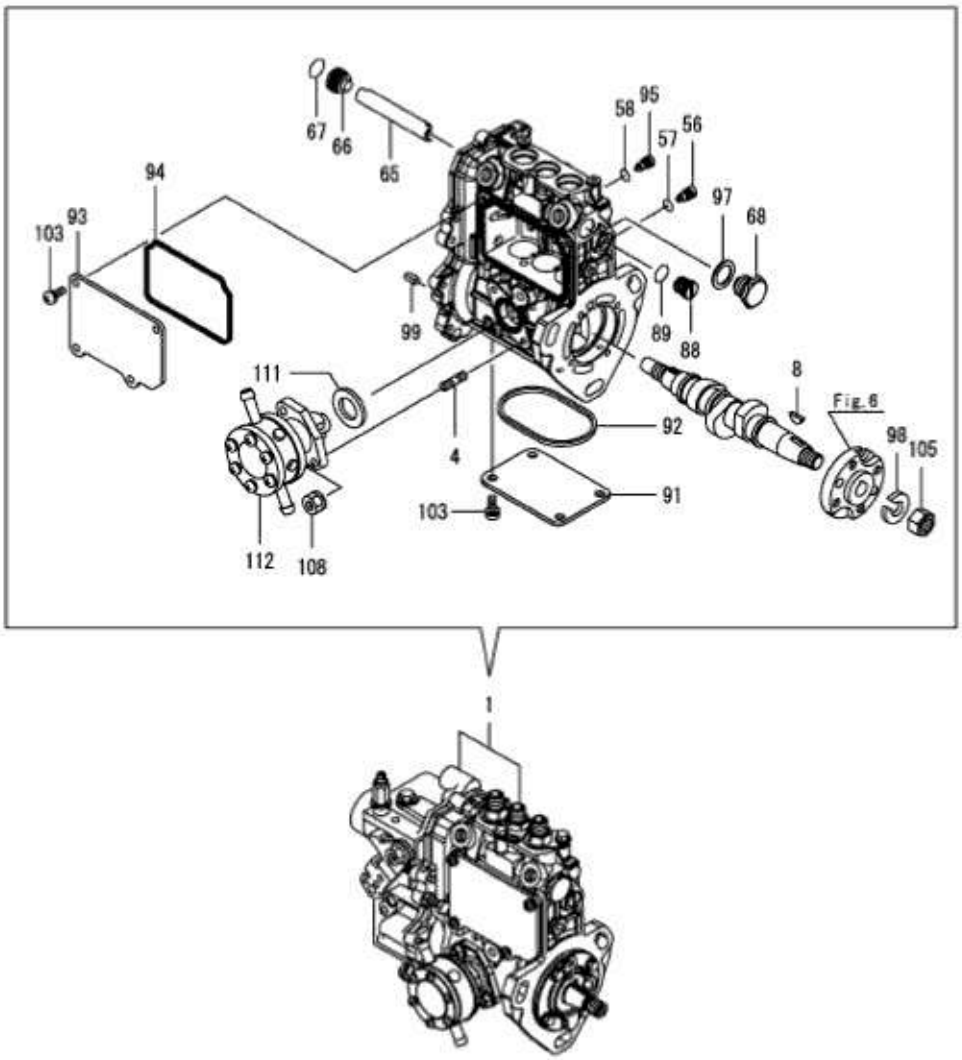

NOTE	

FIG T25NH	FUEL INJECTION PUMP	년/월 Year/Month 2021-12

KEY NO		PART NO	DESCRIPTION	SPEC	QTY	REPAIR	EFFECTIVE DATE	REMARKS
	1	719E10-51380	FIE ASSY		1			
	1-1	719E10-51400	FIE ASSY		1			
	4	129155-51020	STUD		2			
	8	122710-51090	KEY, FEATHER		1			
	56	158600-51270	STOPPER, TAPPET		3			
	57	129155-51280	O-RING, S6		3			
	58	129155-51280	O-RING, S6		1			
	65	129155-51400	PROTECTOR		1			
	66	158600-51410	PLUG, DEFLIFTER M12		1			
	67	119717-51420	O-RING		1			
	68	158600-51420	PLUG, DEFLIFTER M16		1			
	88	158600-51570	PLUG, RACK		1			
	89	129155-51580	O-RING		1			
	91	129155-51701	COVER, PUMP BOTTOM		1			
	92	119717-51711	GASKET, PUMP		1			
	93	119717-51750	COVER, BODY SIDE		1			
	94	119717-51761	GASKET, PUMP COVER		1			
	95	158600-51790	STOPPER, RACK		1			
	97	22190-160002	WASHER, SEAL 16		1			
	98	22217-120000	WASHER		1			
	99	22351-050010	PIN, SPRING 5.0X10		2			
	103	26022-050122	SCREW, M5X12		8			
	105	26716-120002	NUT, M12		1			
	108	119717-51860	NUT, M6		2			
	111	129155-52051	GASKET, PUMP COVER		1			
	112	129100-52101	PUMP ASSY , FUEL FEED		1			

NOTE	

FIG T25NH	GOVERNOR	년/월 Year/Month 2021-12

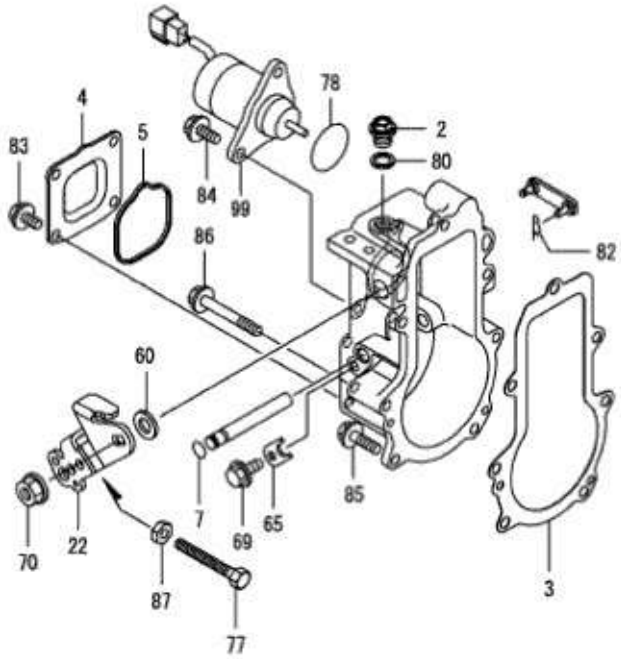

NOTE	

FIG T25NH	GOVERNOR	년/월 Year/Month 2021-12

KEY NO		PART NO	DESCRIPTION	SPEC	QTY	REPAIR	EFFECTIVE DATE	REMARKS
	2	119717-51930	PLUG, M10		1			
	3	119717-61050	GASKET, CASE		1			
	4	119717-61060	COVER, GOVERNOR CASE		1			
	5	119717-61070	GASKET, COVER		1			
	7	129155-51280	O-RING, S6		1			
	22	119515-61440	LEVER, CONTROL		1			
	60	158552-61700	SHIM SET		1			
	65	119660-61901	STOPPER, SHAFT		1			
	69	26106-060102	BOLT, M6X 10 PLATED		1			
	70	26366-080002	"NUT, M8"		1			
	77	129155-61461	BOLT,IDLE LIMIT		1			
	78	158552-61900	O-RING		1			
	80	22190-100002	WASHER, SEAL 10		1			
	82	22372-040000	PIN, SNAP 4		1			
	83	26106-060102	BOLT, M6X 10 PLATED		4			
	84	26106-060142	BOLT, M6X 14 PLATED		2			
	85	26106-060202	BOLT, M6X 20 PLATED		4			
	86	26106-060452	BOLT, M6X 45 PLATED		3			
	87	119740-61470	NUT		1			
	99	129630-77900	SOLENOID, STOP		1			

NOTE	

FIG T25NH	FUEL INJECTION VALVE	년/월 Year/Month 2021-12

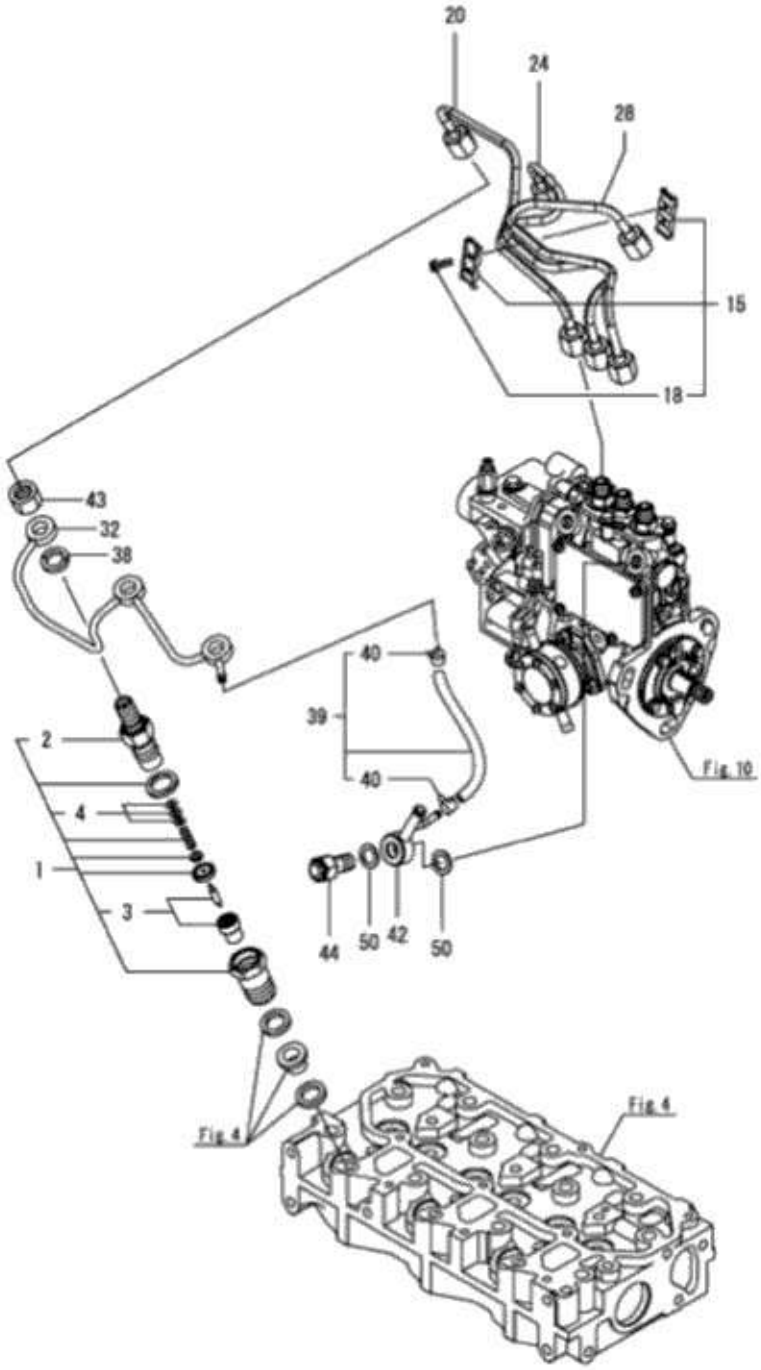

NOTE	

FIG T25NH	FUEL INJECTION VALVE	년/월 Year/Month 2021-12

KEY NO		PART NO	DESCRIPTION	SPEC	QTY	REPAIR	EFFECTIVE DATE	REMARKS
	1	119C10-53000	VALVE ASSY,INJECTION		3			
	2	118200-53010	HOLDER, NOZZLE		3			
	3	119C10-53010	VALVE ASSY,INJECTION		3			
	4	129901-53800	SHIM SET, ADJUSTING		3			
	15	129150-59120	RETAINER, PIPE		1			
	18	129150-59131	BOLT, M4X14		2			
	20	119E10-59810	PIPE ASSY, INJECTION		1			
	24	119E10-59820	PIPE, INJECTION NO.2		1			
	28	119E10-59830	PIPE, INJECTION NO.3		1			
	32	119717-59510	PIPE ASSY, RETURN		1			
	38	129901-59560	GASKET, FUEL RETURN		3			
	39	119540-59570	HOSE ASSY, RETURN		1			
	40	124066-59100	CLAMP, HOSE 8		2			
	42	119840-59570	JOINT, OVERFLOW		1			
	43	119620-59700	NUT, NOZZLE RETURN		3			
	44	119813-59950	VALVE ASSY, CHECK		1			
	50	22190-120002	WASHER, SEAL 12		2			

NOTE	

FIG T25NH	FUEL FILTER	년/월 Year/Month 2021-12

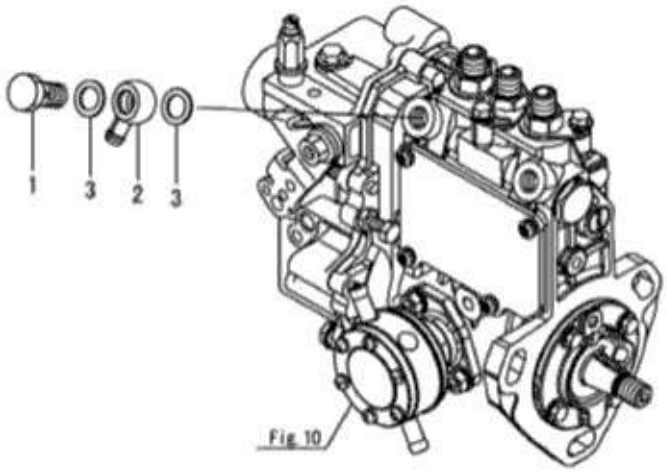

NOTE	

FIG T25NH	FUEL FILTER	년/월 Year/Month 2021-12

KEY NO		PART NO	DESCRIPTION	SPEC	QTY	REPAIR	EFFECTIVE DATE	REMARKS
	1	103854-39140	BOLT, PIPE JOINT		1			
	2	101304-59020	JOINT, PIPE 12		1			
	3	22190-120002	WASHER, SEAL 12		2			

NOTE	

FIG T25NH	STARTING MOTOR	년/월 Year/Month 2021-12

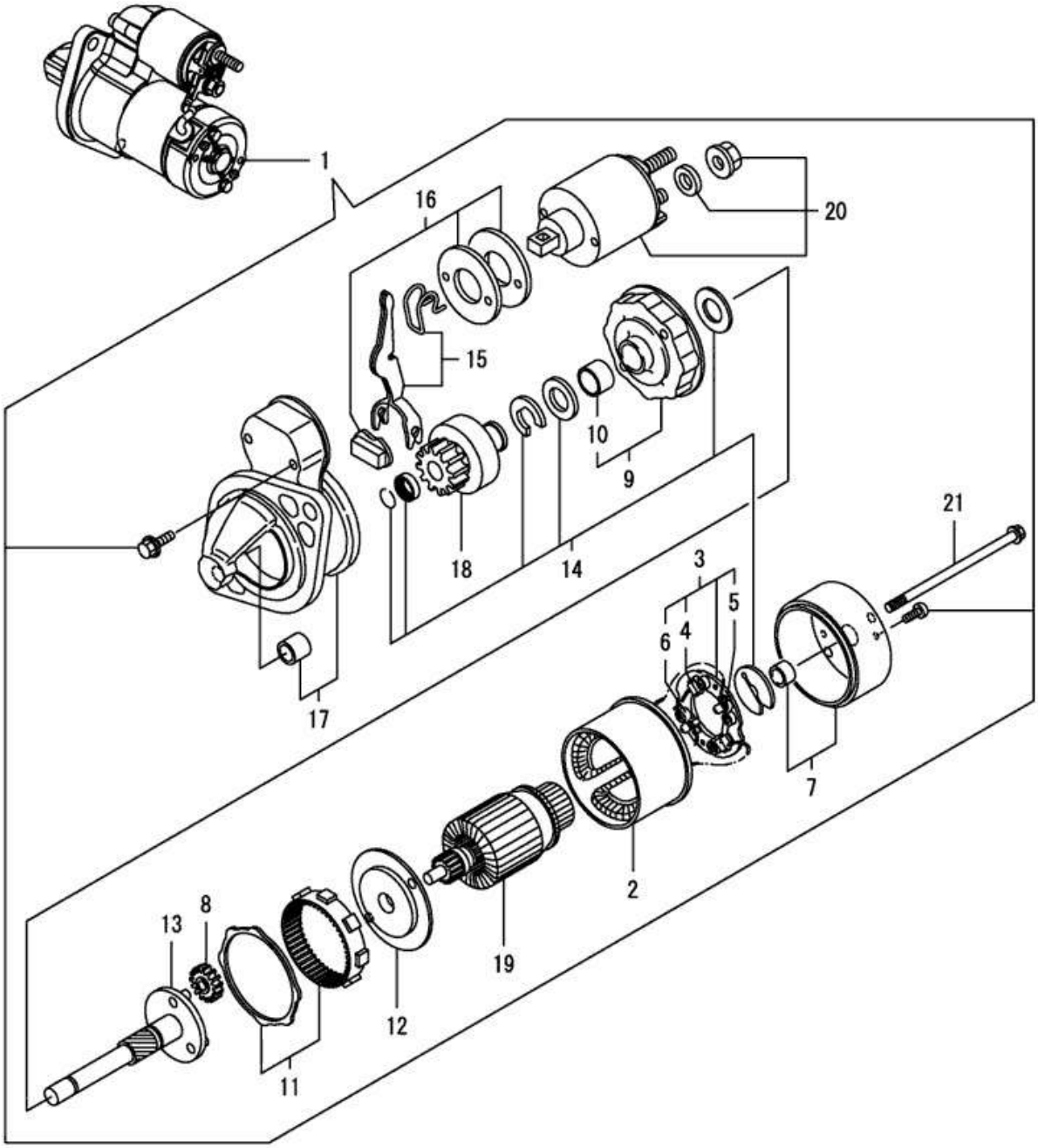

NOTE	

FIG T25NH	STARTING MOTOR	년/월 Year/Month 2021-12

KEY NO		PART NO	DESCRIPTION	SPEC	QTY	REPAIR	EFFECTIVE DATE	REMARKS
	1	119125-77010	STARTER		1			
	2	129698-77110	YOKE ASSY		1			
	3	129698-77120	HOLDER ASSY, BRUSH		1			
	4	129698-77130	BRUSH		2			
	5	129698-77140	BRUSH SET		1			
	6	129698-77150	SPRING, BRUSH		4			
	7	129698-77161	COVER ASSY, STARTER		1			
	8	119125-77170	GEAR, PLANETARY		3			
	9	129698-77180	BRACKET, CENTER P		1			
	10	129698-77190	BRACKET, CENTER		1			
	11	119125-77200	GEAR, INTERNAL		1			
	12	119125-77210	BRACKET, CENTER A		1			
	13	119125-77230	SHAFT, PINION		1			
	14	129698-77250	WASHER SET		1			
	15	119125-77270	LEVER SET, SHIFT		1			
	16	119125-77280	COVER KIT, DUST		1			
	17	119125-77520	CASE ASSY, GEAR		1			
	18	119125-77660	PINION ASSY		1			
	19	119125-77710	ARMATURE ASSY		1			
	20	119125-77760	SWITCH ASSY, MAGNET		1			
	21	124195-77770	BOLT, THROUGH		2			

NOTE	

FIG T25NH	GENERATOR	년/월 Year/Month 2021-12

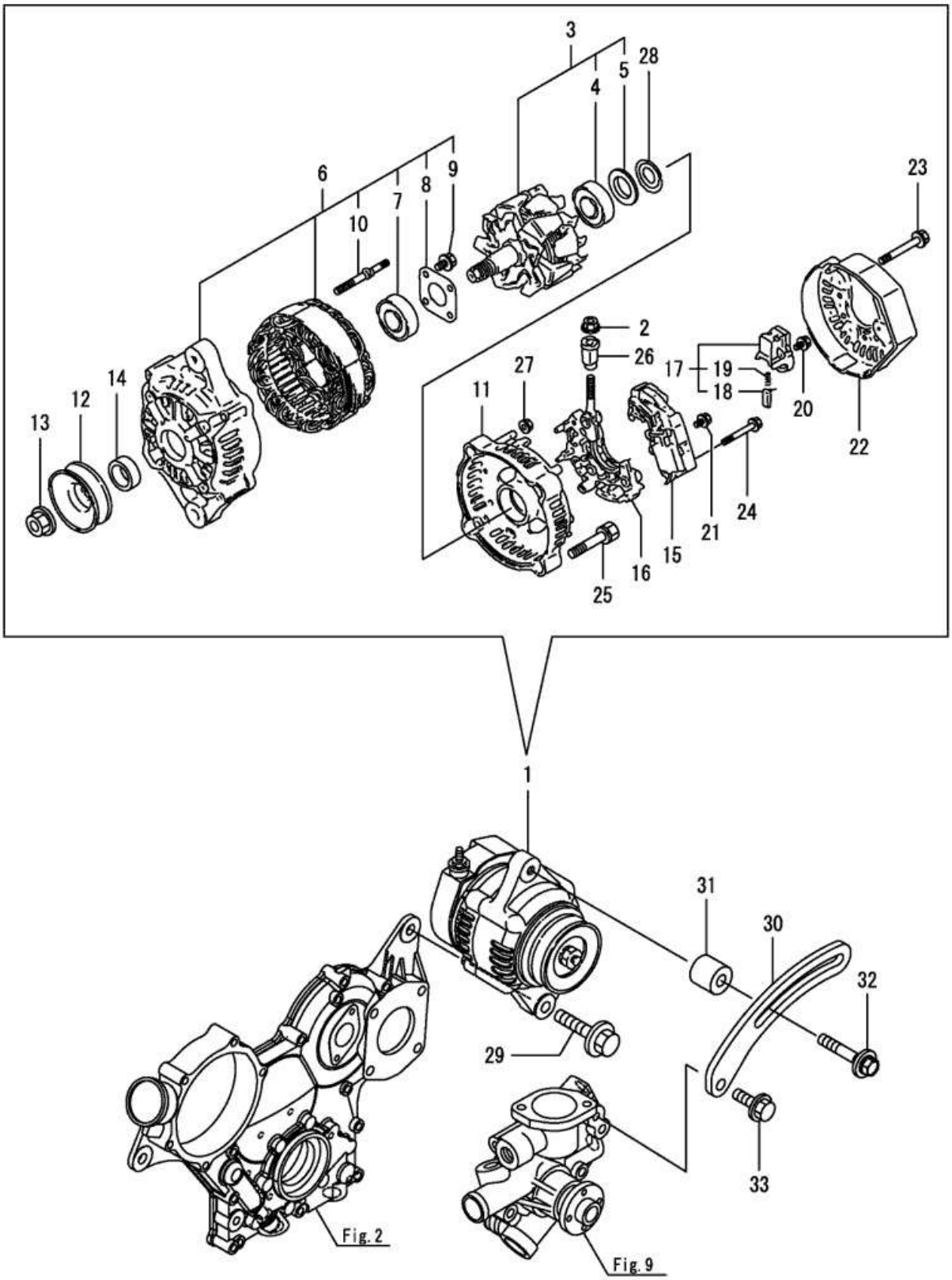

NOTE	

FIG T25NH	GENERATOR	년/월 Year/Month 2021-12

KEY NO		PART NO	DESCRIPTION	SPEC	QTY	REPAIR	EFFECTIVE DATE	REMARKS
	1	129423-77210	ALTERNATOR, 12V-40A		1			
	2	129240-79310	NUT		1			
	3	119620-77380	ROTOR ASSY		1			
	4	123501-79240	BEARING, BALL		1			
	5	119620-79250	COVER, BEARING		1			
	6	119620-77421	FRAME ASSY, DRIVE		1			
	7	119620-79200	BEARING, BALL		1			
	8	119620-79210	PLATE, RETAINER		1			
	9	119620-79220	SCREW		4			
	10	119620-79230	STUD		2			
	11	119620-77440	FRAME ASSY, REAR		1			
	12	119620-77461	PULLEY, GENERATOR		1			
	13	119620-77471	NUT		1			
	14	119620-77490	COLLAR		1			
	15	129423-77730	REGULATOR ASSY		1			
	16	119620-79260	HOLDER ASSY		1			
	17	129052-79270	HOLDER ASSY, BRUSH		1			
	18	119620-77480	BRUSH ASSY, SUB		2			
	19	119620-79280	SPRING		2			
	20	119620-79290	SCREW		6			
	21	119620-79300	SCREW		1			
	22	129240-79300	COVER		1			
	23	119620-79310	BOLT		3			
	24	119620-79320	SCREW, W/WASHER		2			
	25	119620-79330	BOLT		2			
	26	119620-79340	BUSH, INSULATION		1			
	27	119620-79350	NUT		2			
	28	119620-79360	WASHER, THRUST		1			
	29	26106-100452	BOLT, M10X 45 PLATED		1			
	30	119515-77330	ADJUSTER, BELT		1			
	31	124732-77340	SPACER, ADJUSTER		1			
	32	129972-77341	BOLT, ADJUSTER L=50		1			
	33	26106-080202	BOLT, M8X 20 PLATED		1			

NOTE	

FIG T25NH	ACCESORY	년/월 Year/Month 2021-12

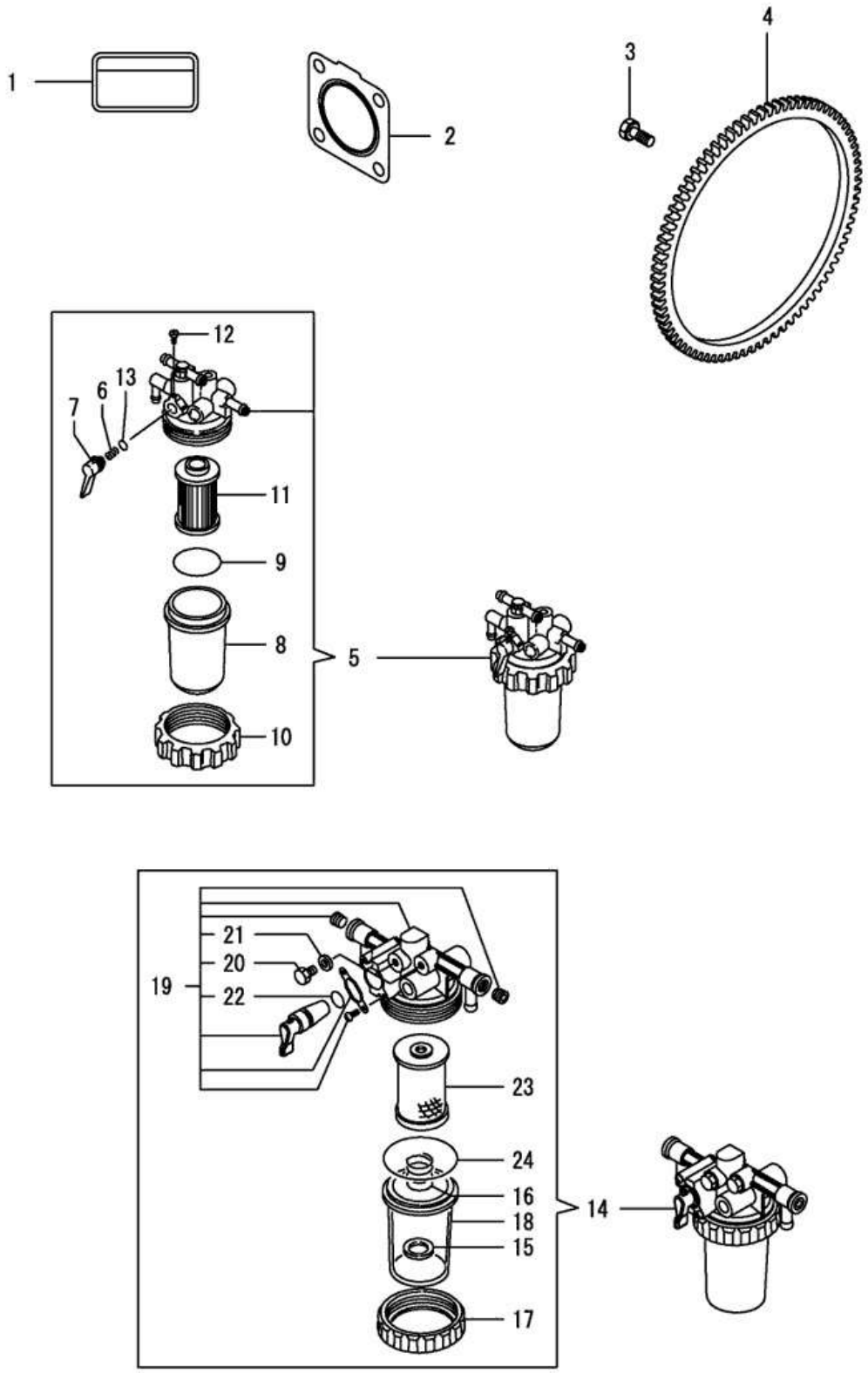

NOTE	

FIG T25NH	ACCESORY	년/월 Year/Month 2021-12

KEY NO		PART NO	DESCRIPTION	SPEC	QTY	REPAIR	EFFECTIVE DATE	REMARKS
	1	114110-07761	FUEL OIL CAUTIN LABEL		1			
	2	119515-13200	GASKET		1			
	3	121111-21501	BOLT, FLYWHEEL		5			
	4	124060-21600	RING GEAR		1			
	5	119740-55601	FILTER FO COMP		1			
	6	104200-55330	SPRING, FUEL VALVE		1			
	7	119810-55340	LEVER, FUEL		1			
	8	121254-55510	CUP, FUEL STARINER		1			
	9	102103-55520	O-RING, FILTER		1			
	10	110250-55610	RING, CUP RETAINING		1			
	11	119810-55650	ELEMENT, FUEL FILTER		1			
	12	104200-55750	SCREW, M4		1			
	13	24311-240100	"O-RING, 1AP10A"		1			
	14	129335-55750	WATER SEPARATOR		1			
	15	129053-55640	FLOAT		1			
	16	129053-55650	SPRING, SCREEN		1			
	17	119833-55660	RING, RETAINING		1			
	18	129335-55740	CUP		1			
	19	129335-55770	BODY ASSY		1			
	20	129242-55750	VALVE, AIR VENT		1			
	21	129242-55760	GASKET, PLUG		1			
	22	24311-000110	O-RING, 1AP11.0		1			
	23	129335-55780	ELEMENT ASSY, FUEL		1			
	24	24311-000440	O-RING, 1AP44.0		1			

NOTE	

2. Engine Accessories PART NO. T2

FIG AIR CLEANER	43
FIG RADIATOR	45
FIG MUFFLER	47
FIG FUEL TANK & FUEL LINE	49
FIG ACCELERATOR	51
FIG OIL COOLER	53

FIG T25NH	AIR CLEANER	년/월 Year/Month 2021-12

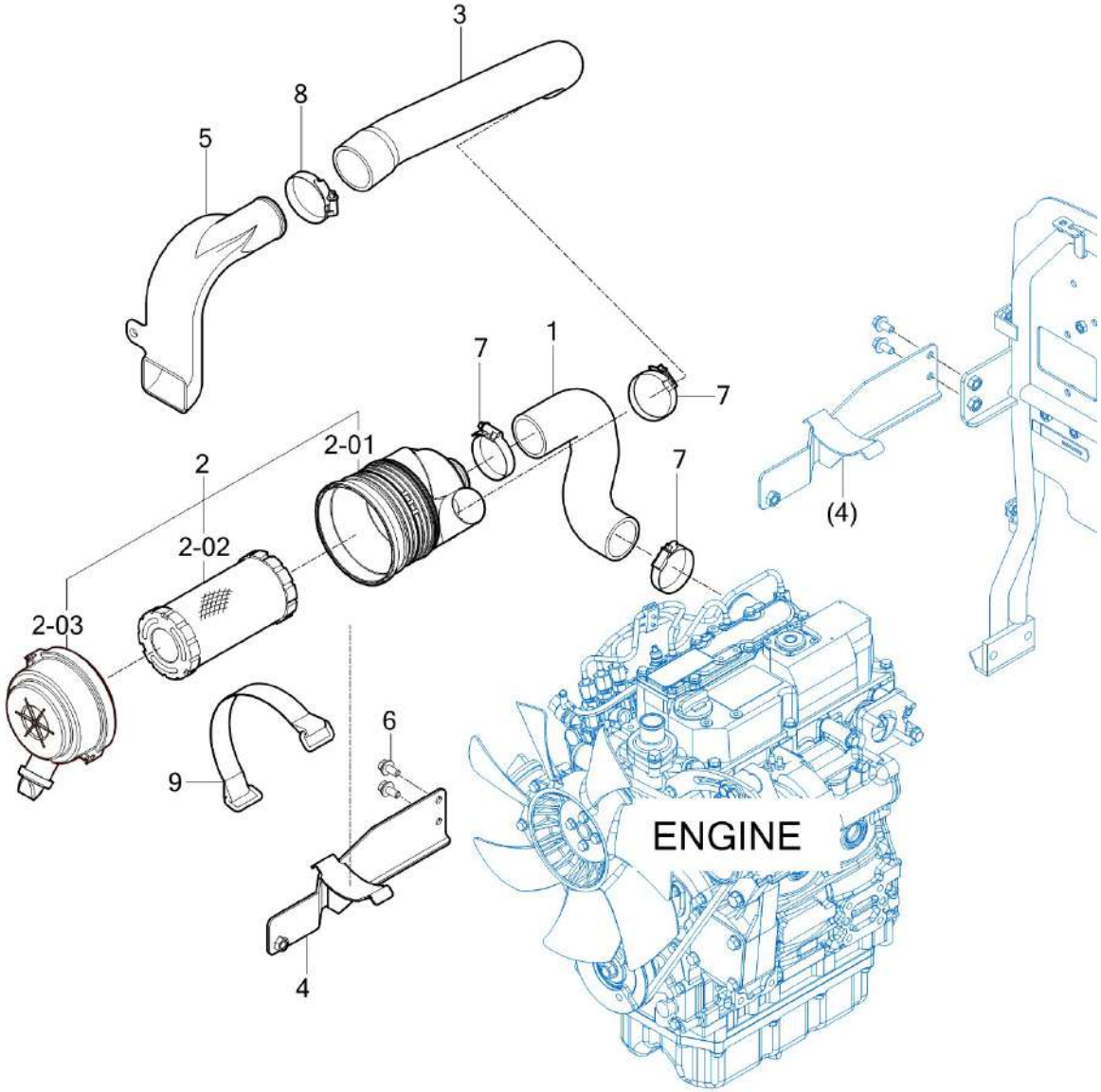

NOTE	

FIG T25NH	AIR CLEANER	년/월 Year/Month 2021-12

KEY NO		PART NO	DESCRIPTION	SPEC	QTY	REPAIR	EFFECTIVE DATE	REMARKS
	1	11111034000	HOSE , AIRCLEANER/OUT		1			
	2	11201032000	AIR CLEANER ASSY		1			
	2-01	11201032010	BODY		1			
	2-02	11201032020	ELEMENT		1			
	2-03	11201032030	COVER		1			
	3	13631213100	HOSE , AIRCLEANER INLET		1			
	4	11971212100GB	BRACKET COMP , AIR CLEANER		1			
	5	11511213300	DUCT, AIR INLET		1			
	6	V2183608020	BOLT , HEX/SP	M8X20	3			
	7	18027090600	BAND CLAMP 60 EMBO TYPE		3			
	8	18027090700	BAND CLAMP 70 EMBO TYPE		1			

NOTE	

FIG T25NH	RADIATOR	년/월 Year/Month 2021-12

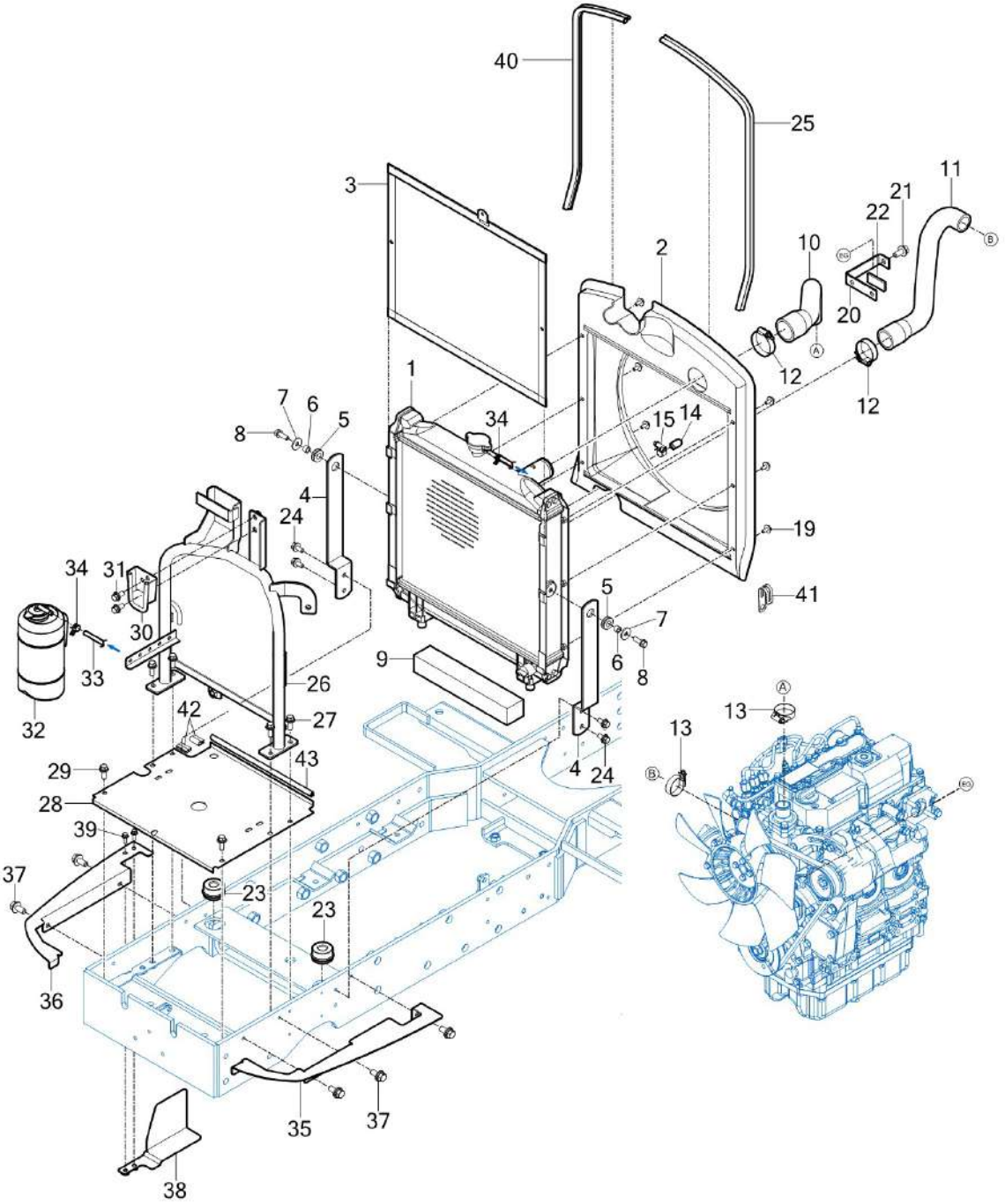

NOTE	

FIG T25NH	RADIATOR	년/월 Year/Month 2021-12

KEY NO		PART NO	DESCRIPTION	SPEC	QTY	REPAIR	EFFECTIVE DATE	REMARKS
	1	13151043000	RADIATOR COMP		1			
	2	11811521300	SHROUD		1			
	3	13151042302GB	RADIATOR NET COMP		1			
	4	13151040031GB	PLATE , RADIATOR FIX		2			
	5	14046210300	GROMMET		2			
	6	15991040050	COLLAR , 08X12X08		2			
	7	35602010150	WASHER , BIND SHAFT		2			
	8	V2173608025	BOLT , HEX/S		2			
	9	11811030500	INSULATOR , RADIATOR		1			
	10	11971511100	HOSE , RADIATOR INLET		1			
	11	11971511200	HOSE , RADIATOR OUTLET		1			
	12	18027090500	BAND CLAMP 50 EMBO TYPE		2			
	13	18027090400	BAND CLAMP 40 EMBO TYPE		2			
	14	12651040300	CAP , RADIATOR		1			
	15	18027090160	BAND CLAMP 16 EMBO TYPE		1			
	19	V2193606016	BOLT , HEX/SPL		6			
	20	11111040120GB	BRACKET , RD HOSE FIX		1			
	21	V2183610025	BOLT , HEX/SP		1			
	22	11101032400	SPONGE , AIRCLEANER		1			
	23	13151040040	CUSHION , RADIATOR		2			
	24	V2183608020	BOLT , HEX/SP		4			
	25	11811512300	INSULATOR , RH/SHROUD		1			
	26	11811021100GB	FRAME COMP , FRONT		1			
	27	V2183608025	BOLT , HEX/SP		4			
	28	11811811210GB	BASE PLATE		1			
	29	V2183608016	BOLT , HEX/SP		2			
	30	36753302201GB	HOLDER COMP , TANK/RESERVE		1			
	31	V2183608020	BOLT , HEX/SP		2			
	32	16003302101	TANK ASSY , RESERVE		1			
	33	11811513100	HOSE , 470/RESERVOIR TANK		1			
	34	36423600080	CLIP , HOSE D=12.5		2			
	35	11811811310GB	BASE PLATE , LH		1			
	36	11811811410GB	BASE PLATE , RH		1			
	37	V2183608016	BOLT , HEX/SP		5			
	38	11811811600GB	BRACKET COMP , RH/WIND GUIDE		1			
	39	V2123606016	BOLT , HEX /SP		2			
	40	11811512400	INSULATOR , LH/SHROUD		1			
	41	37371720090	CLAMP , W/HARNESS		1			
	42	11811811700	WEATHER STRIP , E40		2			
	42	12626010200	INSULATOR , SIDE COVER/LOWER		2			
	42	16991600090	PROTECTOR , 70		1			
	42	11811811700	WEATHER STRIP , E40		2			
	43	17136040050	INSULATOR , SUPPORT		1			
	43	16997021960	INSULATOR , 32		1			

NOTE	

FIG T25NH	MUFFLER	년/월 Year/Month 2021-12

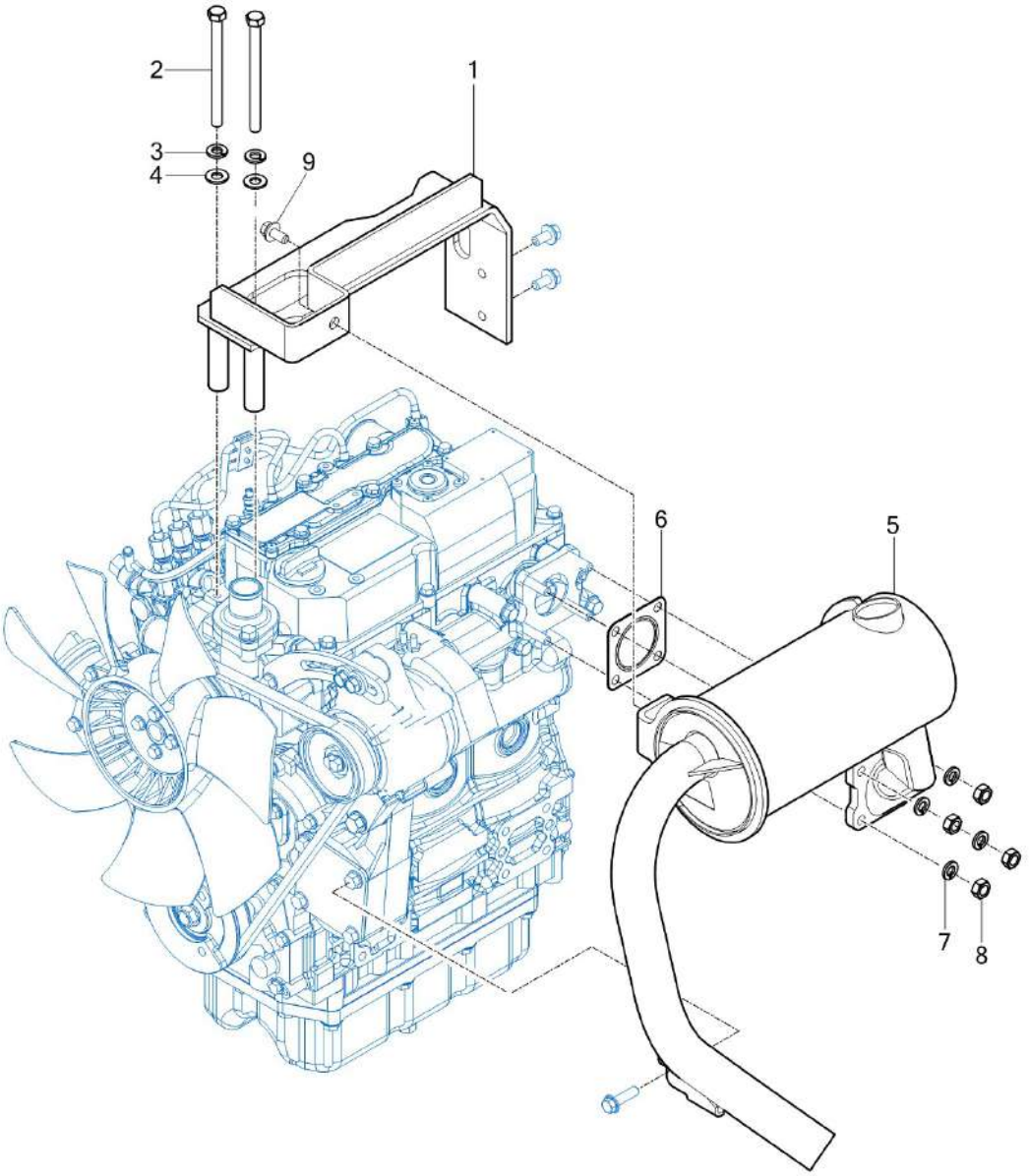

NOTE	

FIG T25NH	MUFFLER	년/월 Year/Month 2021-12

KEY NO		PART NO	DESCRIPTION	SPEC	QTY	REPAIR	EFFECTIVE DATE	REMARKS
	1	11811313100GB	SUPPORT COMP , MUFFLER		1			
	2	V2013608100	BOLT , HEX		2			
	3	V4011600080	WASHER , SPRING		2			
	4	V4111600080	WASHER , PLAIN		2			
	5	11971052000DD	MUFFLER COMP		1			
	6	119515-13200	GASKET		1			
	7	V4011600080	WASHER , SPRING		4			
	8	V3042600080	NUT , HEX/2		4			
	9	V2183610025	BOLT , HEX/SP		1			

NOTE	

FIG T25NH	FUEL TANK & FUEL LINE	년/월 Year/Month 2021-12

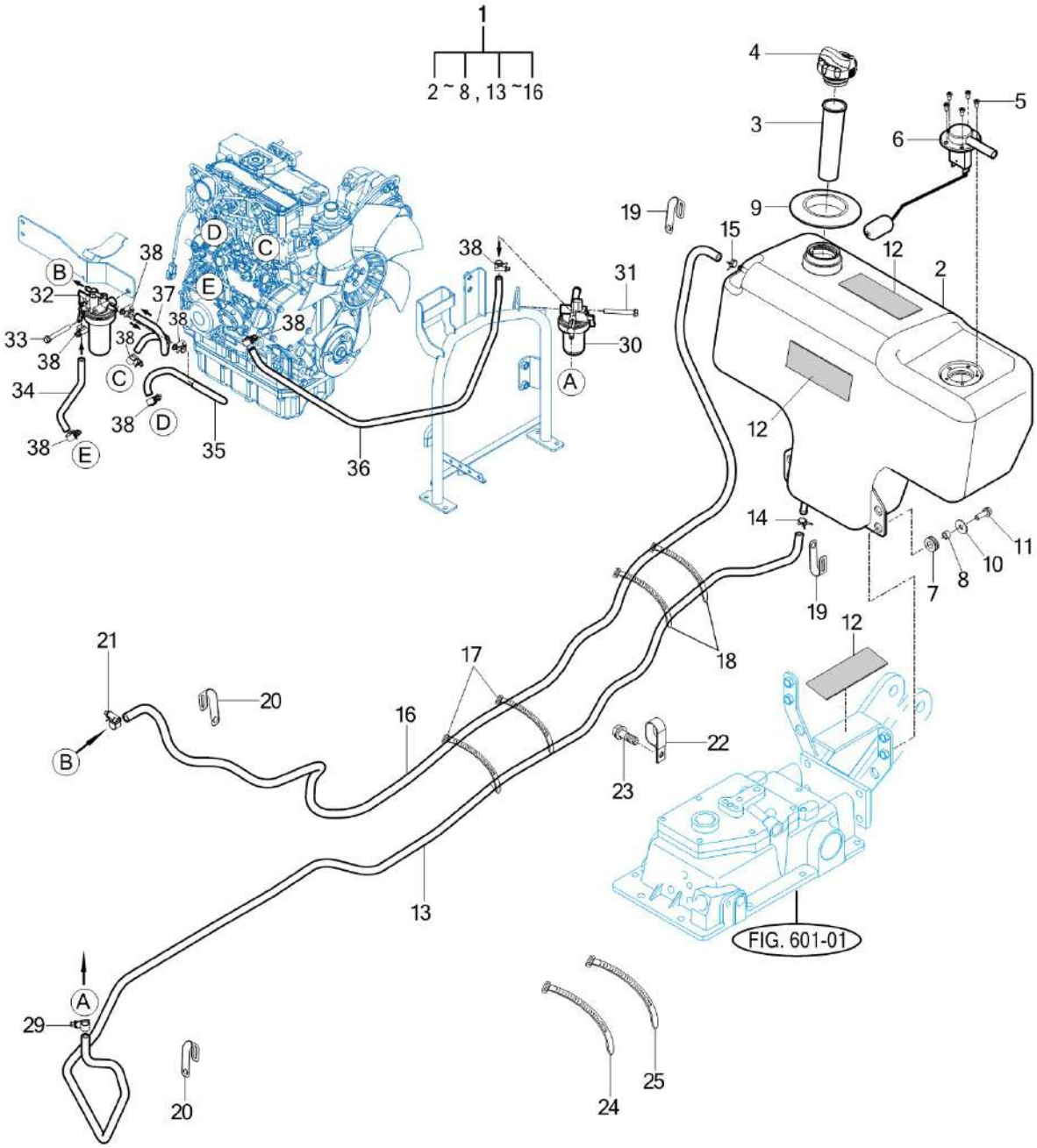

NOTE

FIG T25NH	FUEL TANK & FUEL LINE	년/월 Year/Month 2021-12

KEY NO		PART NO	DESCRIPTION	SPEC	QTY	REPAIR	EFFECTIVE DATE	REMARKS
	1	11811112000	FUEL TANK SUB		1			
	2	11811112100	TANK COMP , FUEL		1			
	3	18711112500	FILTER , FUEL TANK		1			
	4	11973102200	CAP ASSY , FUEL		1			
	5	V2053605010	BOLT , HEX C/R	M5X10	5			
	6	13151112300	GAUGE ASSY , FUEL		1			
	7	14046210300	GROMMET		4			
	8	15991040050	COLLAR , 08X12X08		4			
	9	36143110010	RUBBER , TANK INJECT HOLE		1			
	10	35602010150	WASHER , BIND SHAFT		4			
	11	V2173608025	BOLT , HEX/S	M8X25	4			
	12	13151112011	INSULATOR , 40X70		3			
	13	11811113100	HOSE , FUEL 2300		1			
	14	36323600020	CLIP , HOSE D=14		2			
	15	36423600080	CLIP , HOSE D=12.5		1			
	16	13151113201	HOSE COMP , FUEL 2200		1			
	17	13764020030	CABLE TIE , 140		10			
	18	13424020060	CABLE TIE , 300		20			
	19	14256210040	CLAMP , 9		4			
	20	37371720110	CLAMP , FLASHER W/HARNESS		4			
	21	18027090160	BAND CLAMP 16 EMBO TYPE		1			
	22	14441010161	CLAMP , RADIATOR HOSE		1			
	23	V2183610020	BOLT , HEX/SP		1			
	24	15606950150	CABLE TIE , 370		2			
	25	14216210380	CABLE TIE , 200		4			
	29	36323600020	CLIP , HOSE D=14		1			
	30	129335-55750	WATER SEPARATOR		1			
	31	V2173608065	BOLT , HEX/S		1			
	32	119740-55601	FILTER FO COMP		1			
	33	V2173608065	BOLT , HEX/S		1			
	34	11111113500	HOSE ASSY, FUEL FILTER/220		1			
	35	11111113201	HOSE ASSY, FUEL IN/380		1			
	36	11811491100	FUEL HOSE , 800		1			
	37	11811491400	FUEL HOSE , 250		1			
	38	18027090160	BAND CLAMP 16 EMBO TYPE		8			

NOTE	

FIG T25NH	ACCELERATOR	년/월 Year/Month 2021-12

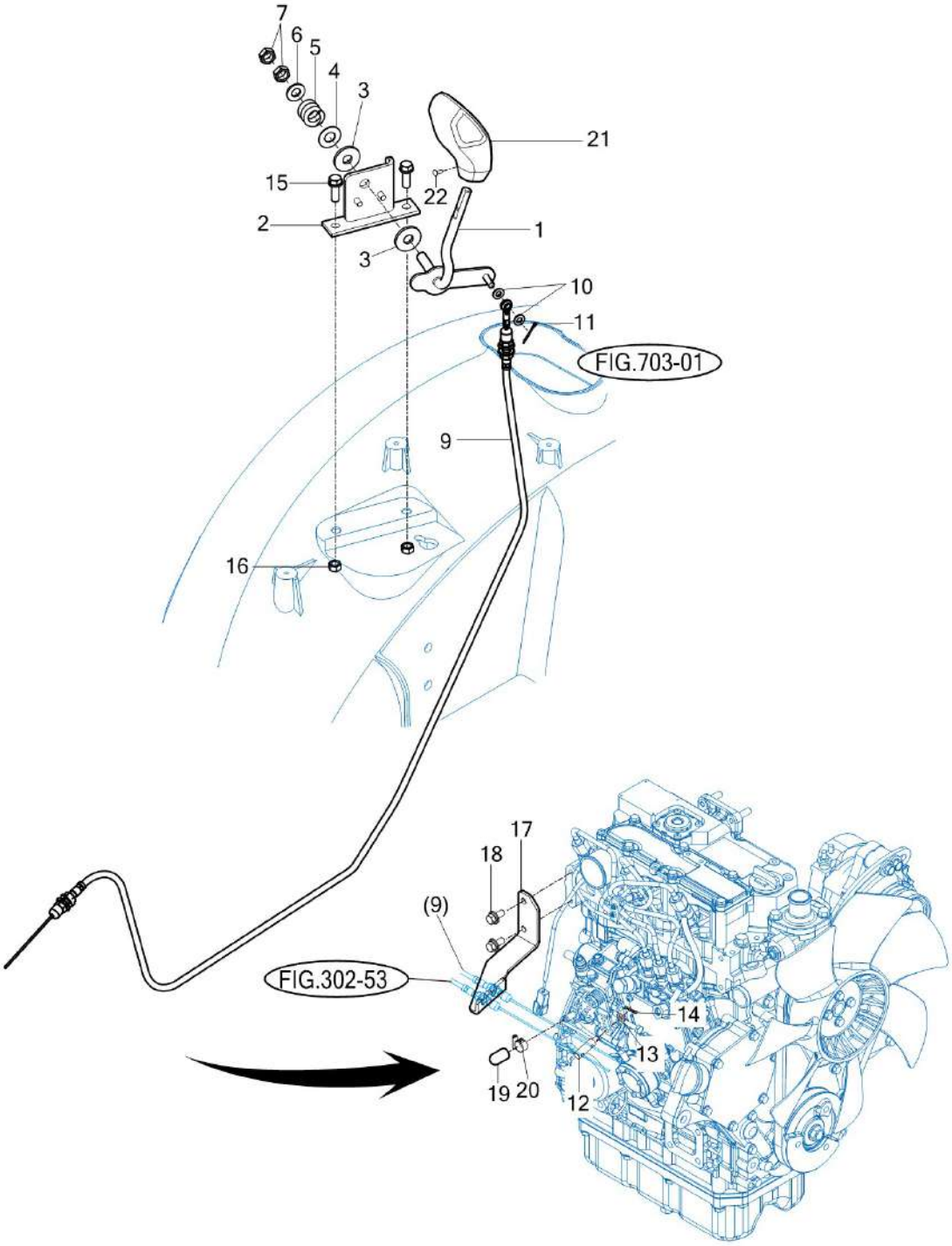

NOTE	

FIG T25NH	ACCELERATOR	년/월 Year/Month 2021-12

KEY NO		PART NO	DESCRIPTION	SPEC	QTY	REPAIR	EFFECTIVE DATE	REMARKS
	1	11811162500GB	THROTTLE LEVER COMP		1			
	2	11811163100GB	BRACKET COMP , ACCELERATOR		1			
	3	15965120021	LINING , 11X30X03		2			
	4	36104400180	WASHER		1			
	5	14041170080	SPRING , COMPRESSION 22		1			
	6	V4111600100	WASHER , PLAIN	M10	1			
	7	V3053600100	NUT , HEX/3		2			
	9	11811162100	HAND THROTTLE CABLE		1			
	10	V4111600060	WASHER , PLAIN		2			
	11	V5001920020	PIN , SPLIT		1			
	12	11111162411	PIN , ACELERATOR		1			
	13	V4111600060	WASHER , PLAIN		1			
	14	V5001916015	PIN , SPLIT		1			
	15	V2173608025	BOLT , HEX/S		2			
	16	V3042600080	NUT , HEX/2		2			
	17	11811611100GB	ACCEL , WIRE HOLDER		1			
	18	V2183608020	BOLT , HEX/SP		2			
	19	12651040300	CAP , RADIATOR		1			
	20	36423600080	CLIP , HOSE D=12.5		1			
	21	11817513600	GRIP(THROTTLE)		1			
	22	V1122804012	SCREW , C/R FLAT		1			

NOTE	

FIG T25NH	OIL COOLER	년/월 Year/Month 2021-12

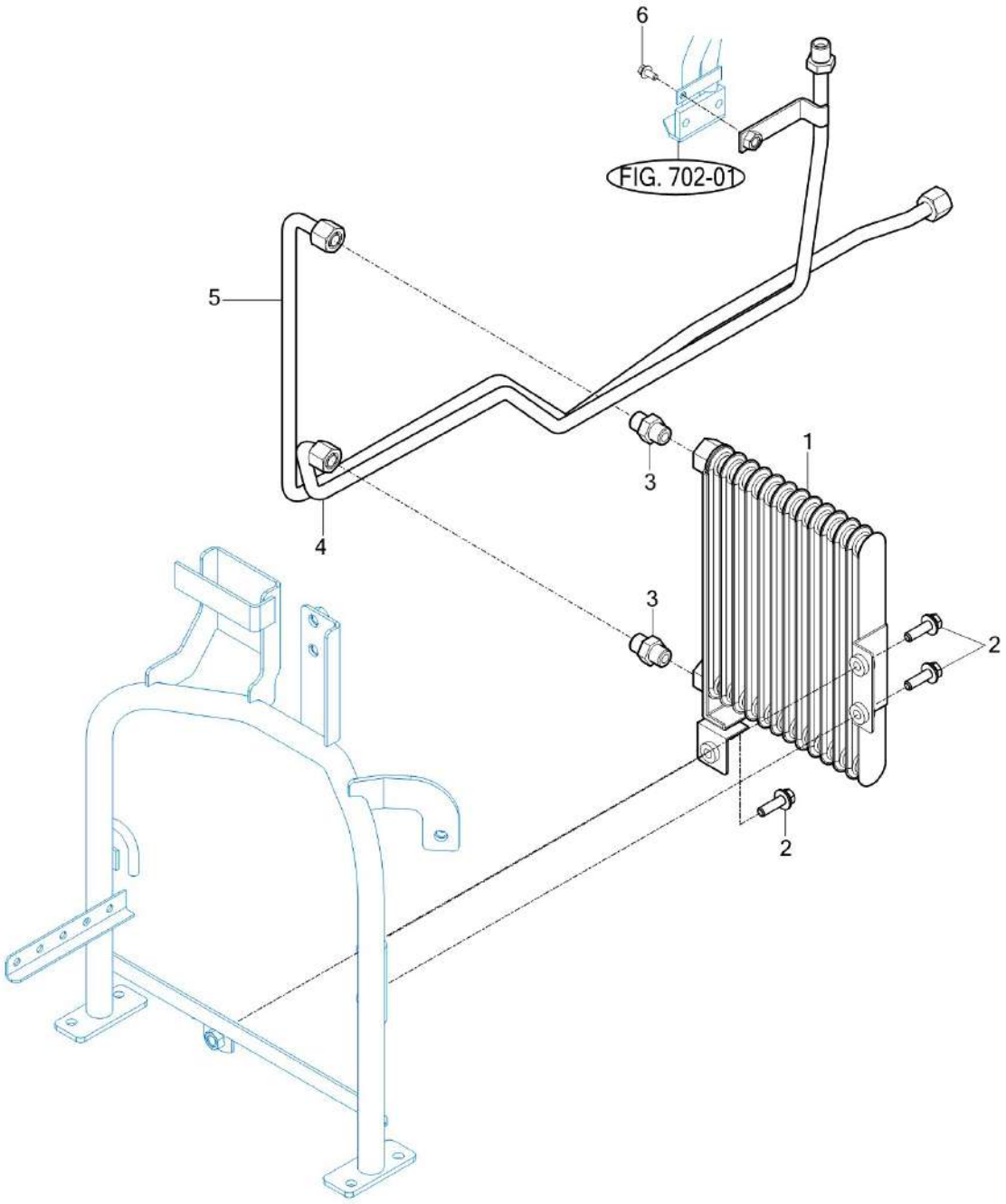

NOTE	

FIG T25NH	OIL COOLER	년/월 Year/Month 2021-12

KEY NO		PART NO	DESCRIPTION	SPEC	QTY	REPAIR	EFFECTIVE DATE	REMARKS
	1	14721062003	COOLER COMP , OIL		1			
	2	V2183608030	BOLT , HEX/SP		3			
	3	14721062300	UNION UNIT , OIL COOLER		2			
	4	11815403100GB	PIPE COMP , COOLER IN		1			
	5	11815404100GB	PIPE COMP , COOLER OUT		1			
	6	V2183608020	BOLT , HEX/SP		1			

NOTE	

3. Clutch/Brake/Steering PART NO. T3

FIG	FLYWHEEL COVER	56
FIG	SPEED CONTROL	58
FIG	BRAKE	61
FIG	BRAKE PEDAL & LINKAGE	63
FIG	STEERING WHEEL & DASH COVER	65
FIG	STEERING VALVE	67
FIG	STEERING CYLINDER	69
FIG	FRONT WHEEL	71
FIG	REAR WHEEL	73

FIG T25NH	FLYWHEEL COVER	년/월 Year/Month 2021-12

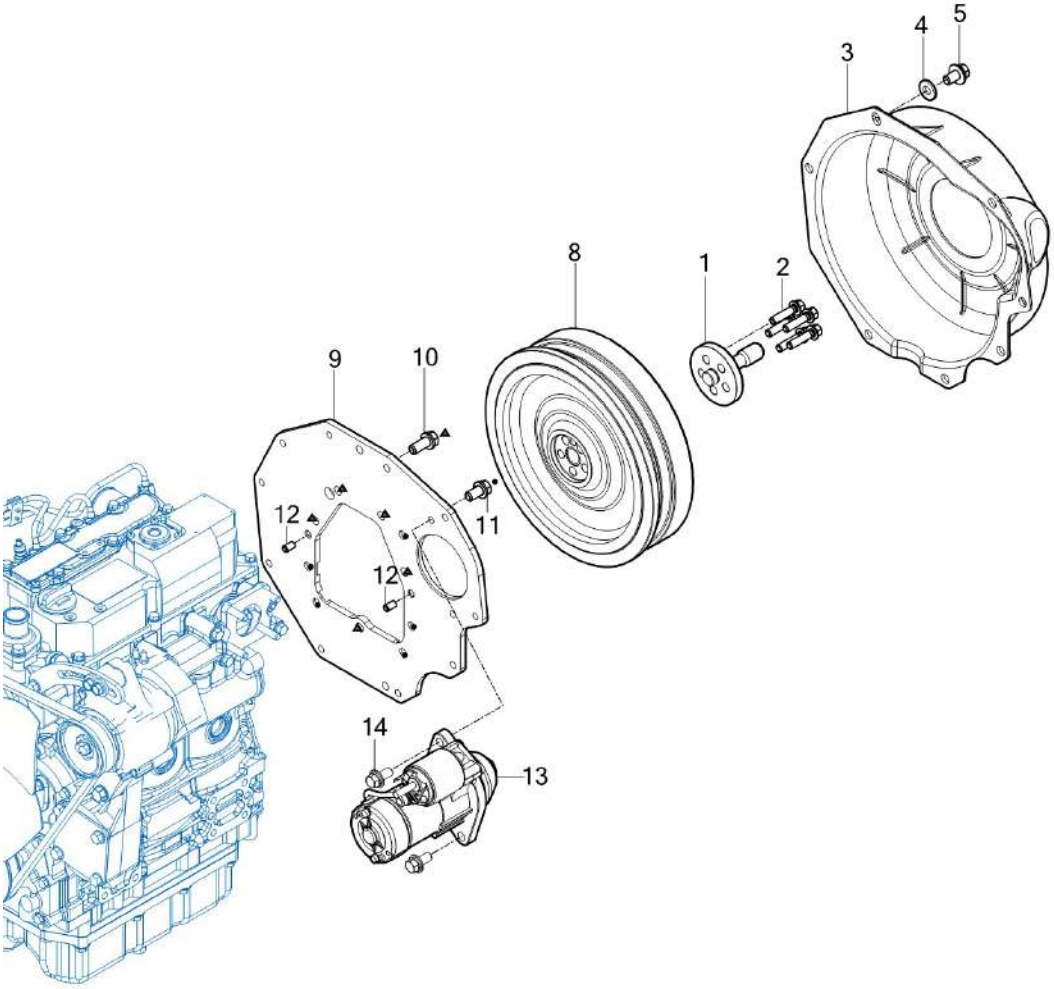

NOTE	

FIG T25NH	FLYWHEEL COVER	년/월 Year/Month 2021-12

KEY NO		PART NO	DESCRIPTION	SPEC	QTY	REPAIR	EFFECTIVE DATE	REMARKS
	1	11811010010	COUPLING , PTO		1			
	2	14661019340	BOLT , FLYWHEEL		5			
	3	11102100011	COVER , FLYWHEEL		1			
	4	13377210020	WASHER , 11X24X3		1			
	5	V2183610020	BOLT , HEX/SP		5			
	8	11111012000	FLYWHEEL ASSY		1			
	9	11111480010GB	PLATE , REAR		1			
	10	V2173610025	BOLT , HEX/S		5			
	11	V2173610020	BOLT , HEX/S		5			
	12	V5201008016	PIN , PARALLEL/A		2			
	13	119125-77010	STARTER		1			
	14	V2183610025	BOLT , HEX/SP		2			

NOTE	

FIG T25NH	SPEED CONTROL	년/월 Year/Month 2021-12

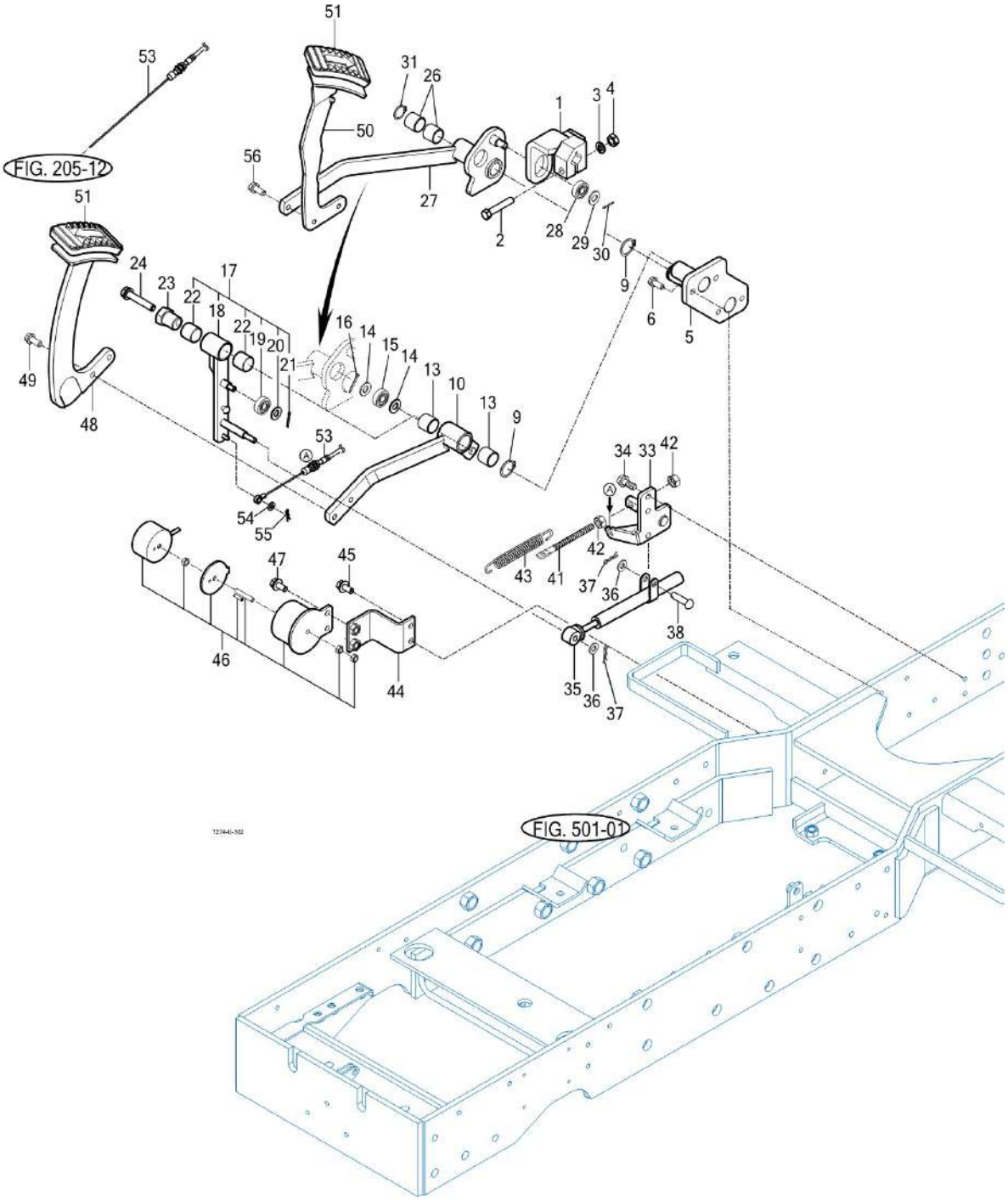

NOTE	

FIG T25NH	SPEED CONTROL	년/월 Year/Month 2021-12

KEY NO		PART NO	DESCRIPTION	SPEC	QTY	REPAIR	EFFECTIVE DATE	REMARKS
	1	11972322100	HOLDER COMP		1			
	1	11972322101	HOLDER COMP		1			
	2	V2013610055	BOLT , HEX	M10X55	1			
	2	V2013608045	BOLT , HEX		1			
	3	V4011600100	WASHER , SPRING	M10	1			
	3	V4011600080	WASHER , SPRING		1			
	4	V3042600100	NUT , HEX/2	M10	1			
	4	V3042600080	NUT , HEX/2		1			
	5	11972322200GB	PIN COMP		1			
	6	V2173608020	BOLT , HEX/S	M8X20	4			
	9	V7041400200	C-RING , SHAFT	20	2			
	10	11972323200GB	ARM COMP , FORWARD		1			
	13	11972320030	DU BUSH , 25X28X20		2			
	14	V4111600100	WASHER , PLAIN	M10	2			
	15	V6001506000	BEARING , BALL	6000DD	1			
	16	V5001920015	PIN , SPLIT	2X15	1			
	17	11972324000	CAM SUB ASSY		1			
	18	11972324100GB	ARM COMP , CAM		1			
	19	14722310060	BEARING , BALL		1			
	20	V4111600080	WASHER , PLAIN	M8	1			
	21	V5001920015	PIN , SPLIT	2x15	1			
	22	11972320030	DU BUSH , 25X28X20		2			
	23	11972320020	PIN , NEUTRAL		1			
	24	V2143610080	BOLT , HEX FINE /S	M10X50	1			
	26	11972320040	DU BUSH , 25X28X30		2			
	27	11972322300GB	ARM COMP, REVERSE		1			
	28	V6001506000	BEARING , BALL	6000DD	1			
	29	V4111600100	WASHER , PLAIN	M10	1			
	30	V5001920015	PIN , SPLIT	2X15	1			
	31	V7041400250	C-RING , SHAFT		1			
	33	11972325100GB	PIN COMP , SPRING		1			
	34	V2173608025	BOLT , HEX/S	M8X25	2			
	35	13152312400	DAMPER , OIL		1			
	36	V4111600080	WASHER , PLAIN	M8	4			
	37	V5601600008	PIN , SNAP	8	4			
	38	14043120060	PIN , YOKE		1			
	41	34522150080	ROD , CHAIN(TENSION)(82)		1			
	42	V3043600080	NUT , HEX/2	M8	2			
	43	14722310033	SPRING , RETURN		1			
	44	13152332103GB	BRACKET COMP , CRUISE		1			
	45	V2173608020	BOLT , HEX/S	M8X20	2			
	46	12382323000	MAGNETIC ASSY , CRUISE		1			
	46	12382323001	MAGNETIC ASSY , CRUISE		1			
	47	V2173608020	BOLT , HEX/S	M8X20	2			
	48	13152323303	PEDAL COMP, FORWARD		1			

NOTE	

FIG T25NH	SPEED CONTROL	년/월 Year/Month 2021-12

KEY NO		PART NO	DESCRIPTION	SPEC	QTY	REPAIR	EFFECTIVE DATE	REMARKS
	49	V2173608020	BOLT , HEX/S		2			
	49	V2173608020	BOLT , HEX/S	M8X20	4			
	50	11972322400GB	PEDAL COMP, REVERSE		1			
	51	14722312730	PAD		2			
	53	11971162000	CABLE ASSY , AUTO THROTTLE		1			
	54	V4111600060	WASHER , PLAIN	M6	1			
	55	V5601600006	PIN , SNAP		1			
	56	V2183608020	BOLT , HEX/SP		2			

NOTE	

FIG T25NH	BRAKE	년/월 Year/Month 2021-12

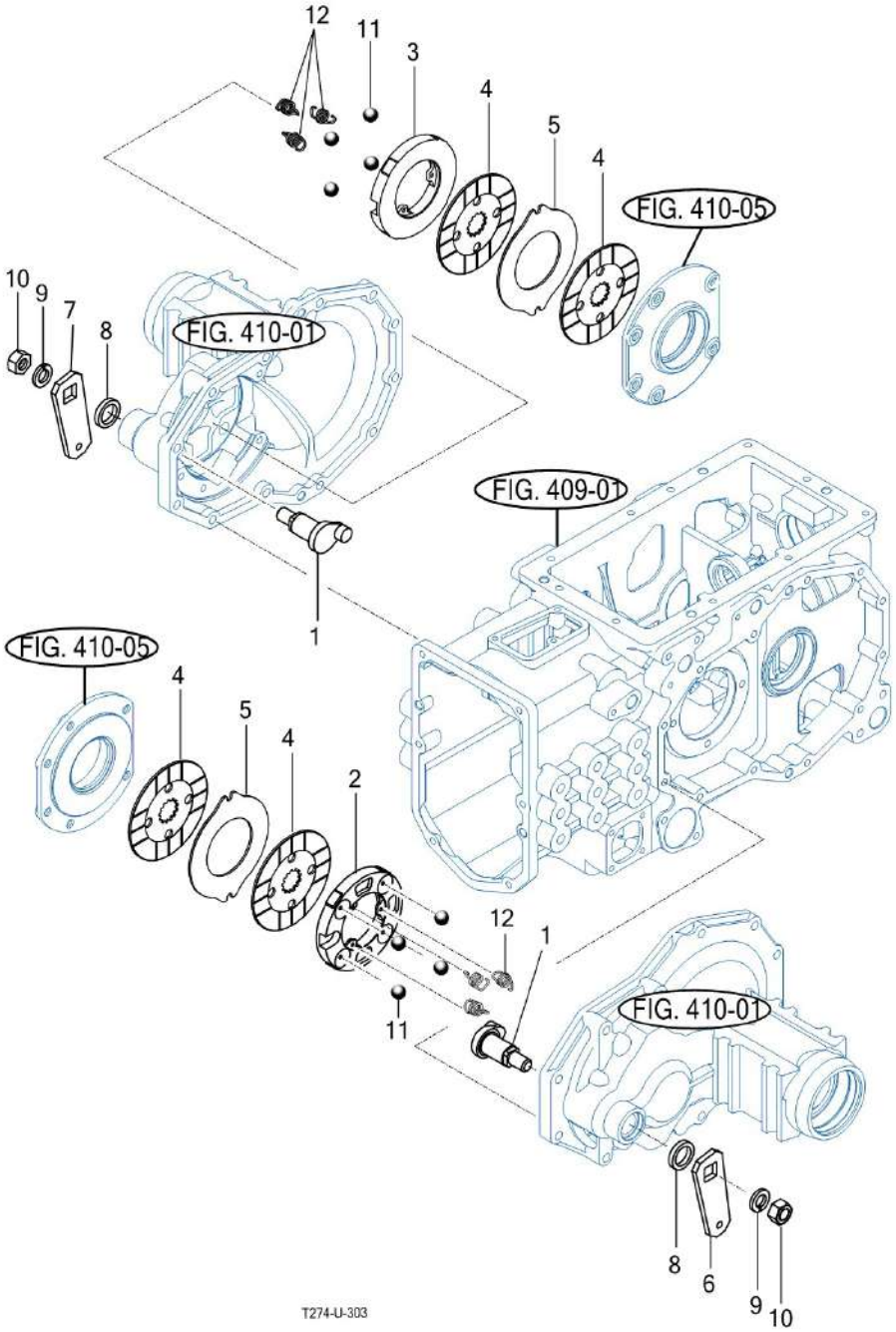

NOTE	

FIG T25NH	BRAKE	년/월 Year/Month 2021-12

KEY NO		PART NO	DESCRIPTION	SPEC	QTY	REPAIR	EFFECTIVE DATE	REMARKS
	1	16703270011	CAM		1			
	2	13153270021M	METAL ,BRAKE LH		1			
	3	13153270041M	METAL ,BRAKE RH		1			
	4	13153272100	PLATE COMP , DISC		4			
	5	13153270030	PLATE , SEPARATE		2			
	6	13153270090	ARM , BRAKE		1			
	7	13153270090	ARM , BRAKE		1			
	8	V7441253506	SEAL , OIL/D		2			
	9	V4011600160	WASHER , SPRING	M16	2			
	10	V3343600160	NUT , HEX FINE/2	M16	2			
	11	V6802000019	BALL , STEEL		8			
	12	16703272030	SPRING , RETURN		6			

NOTE	

FIG T25NH	BRAKE PEDAL & LINKAGE	년/월 Year/Month 2021-12

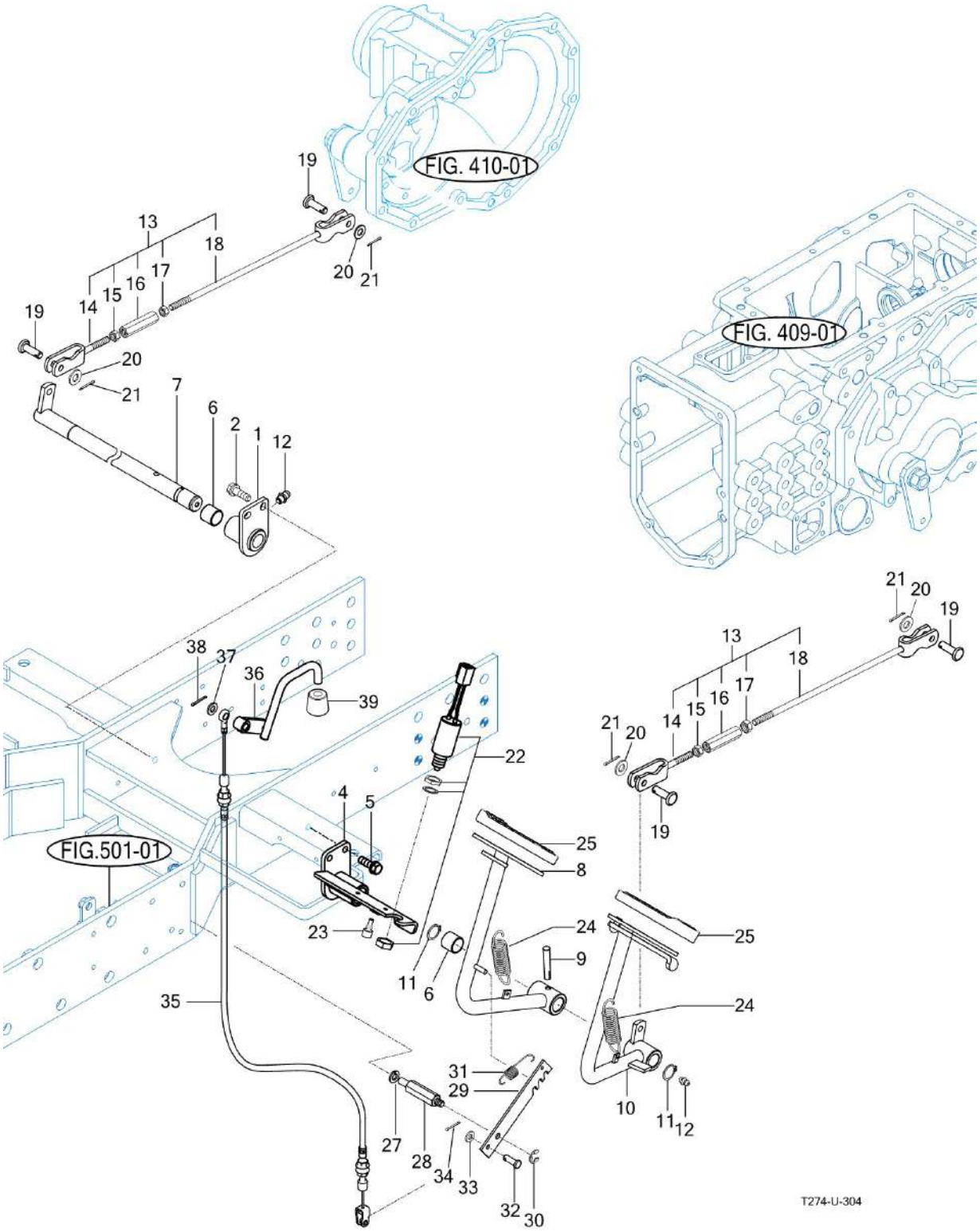

NOTE	

FIG T25NH	BRAKE PEDAL & LINKAGE	년/월 Year/Month 2021-12

KEY NO		PART NO	DESCRIPTION	SPEC	QTY	REPAIR	EFFECTIVE DATE	REMARKS
	1	13153282104GB	HUB COMP , BRAKE RH		1			
	2	V2173608020	BOLT , HEX/S	M8X20	2			
	4	13153282204GB	HUB COMP , BRAKE LH		1			
	5	V2173608020	BOLT , HEX/S	M8X20	2			
	6	36707030080	BUSH , 20X23X20		2			
	7	13153282303	ARM COMP , BRAKE RH		1			
	8	13153283103GB	PEDAL COMP , BRAKE RH		1			
	9	V5801406032	PIN , SPRING	6X32	1			
	10	13153283203GB	PEDAL COMP , BRAKE LH		1			
	11	V7041400200	C-RING , SHAFT	20	2			
	12	V7601500000	NIPPLE , GREASE/A-M6F		2			
	13	13153284002	ROD ASSY , BRAKE		2			
	14	14573282200	ROD COMP , FORK 100		2			
	15	V3043600080	NUT , HEX/2	M8	2			
	16	16601220020	TURNBUCKLE , M8 L60		2			
	17	15601320073	NUT , HEX LH		2			
	18	13153284101	ROD COMP , HOOK		2			
	19	21443370020	PIN , 08X25		4			
	20	V4111600080	WASHER , PLAIN	M8	4			
	21	V5001920015	PIN , SPLIT	2X15	4			
	22	13153285001	SWITCH ASSY , BRAKE		1			
	23	21004100070	STOPPER , ARM/CARRYING		2			
	24	13153280061	SPRING , BRAKE		2			
	25	13153280050	PAD		2			
	27	V4011600080	WASHER , SPRING	M8	1			
	28	13153280023	PIN , PARKING BRAKE		1			
	29	13153280032GB	STOPPER , PARKING		1			
	30	V7081400060	E-RING	6	1			
	31	13153280040	SPRING , PARKING		1			
	32	16177020090	PIN , 6X15	6X15	1			
	33	V4111600060	WASHER , PLAIN	M6	1			
	34	V5001920015	PIN , SPLIT	2X15	1			
	35	13153286301	CABLE ASSY , PARKING		1			
	36	13156301001GB	LEVER COMP		1			
	37	V4111600060	WASHER , PLAIN	M6	1			
	38	V5001925020	PIN D2.5x20	2.5X20	1			
	39	12121120090	GRIP , HOOD LOCK		1			

NOTE	

FIG T25NH	STEERING WHEEL & DASH COVER	년/월 Year/Month 2021-12

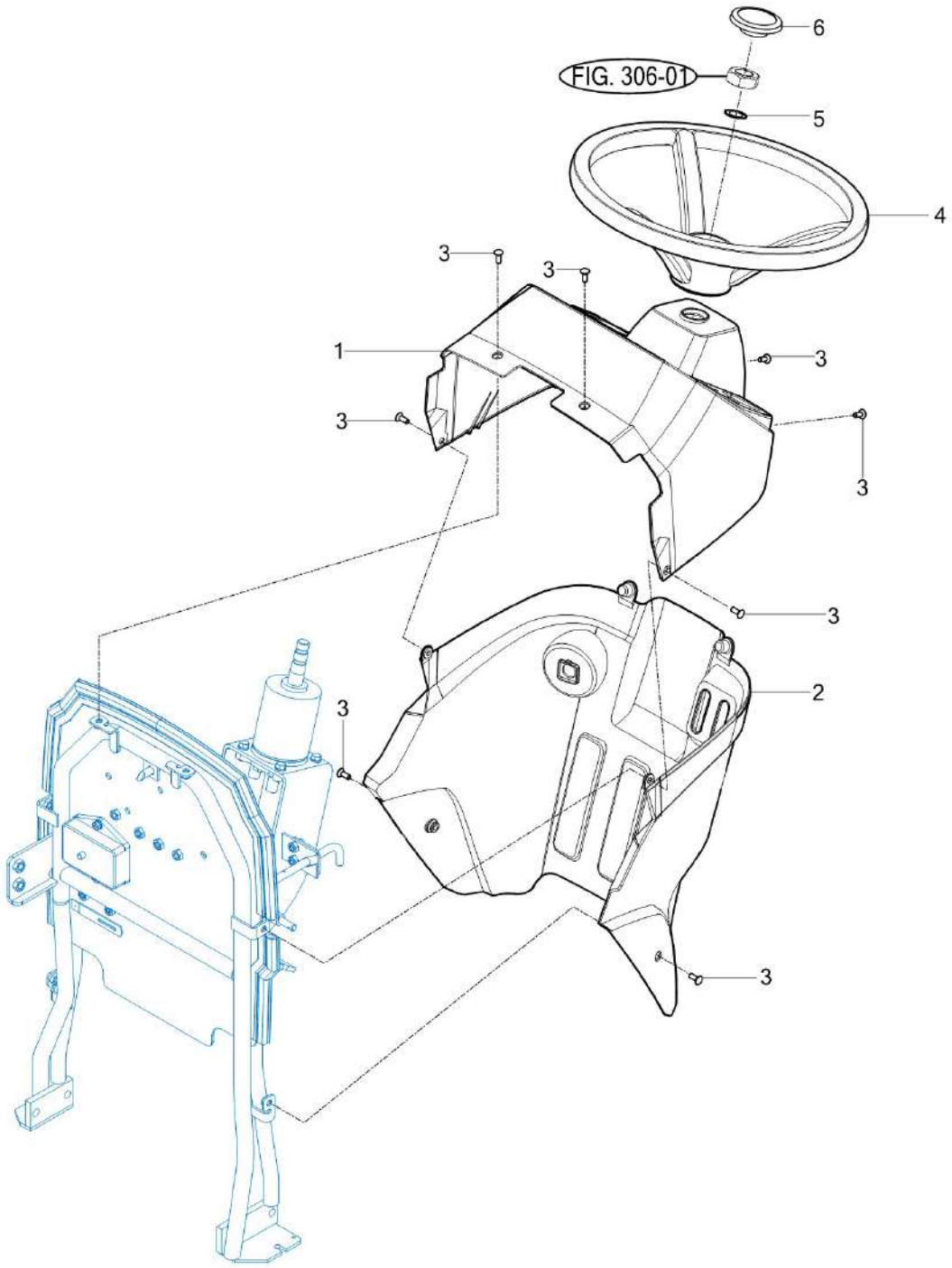

NOTE	

FIG T25NH	STEERING WHEEL & DASH COVER	년/월 Year/Month 2021-12

KEY NO		PART NO	DESCRIPTION	SPEC	QTY	REPAIR	EFFECTIVE DATE	REMARKS
	1	11816032100NG	COVER , DASH UPR		1			
	2	11816033100NG	DASHCOVER , LOW		1			
	3	V1122806016	SCREW , C/R FLAT		8			
	4	13834012100	STEERTING WHEEL		1			
	5	13834012200	WASHER , TOOTH-LOCK/OUT		1			
	6	11644012302	CAP(TYM) , STEERING WHEEL		1			

NOTE	

FIG T25NH	STEERING VALVE	년/월 Year/Month 2021-12

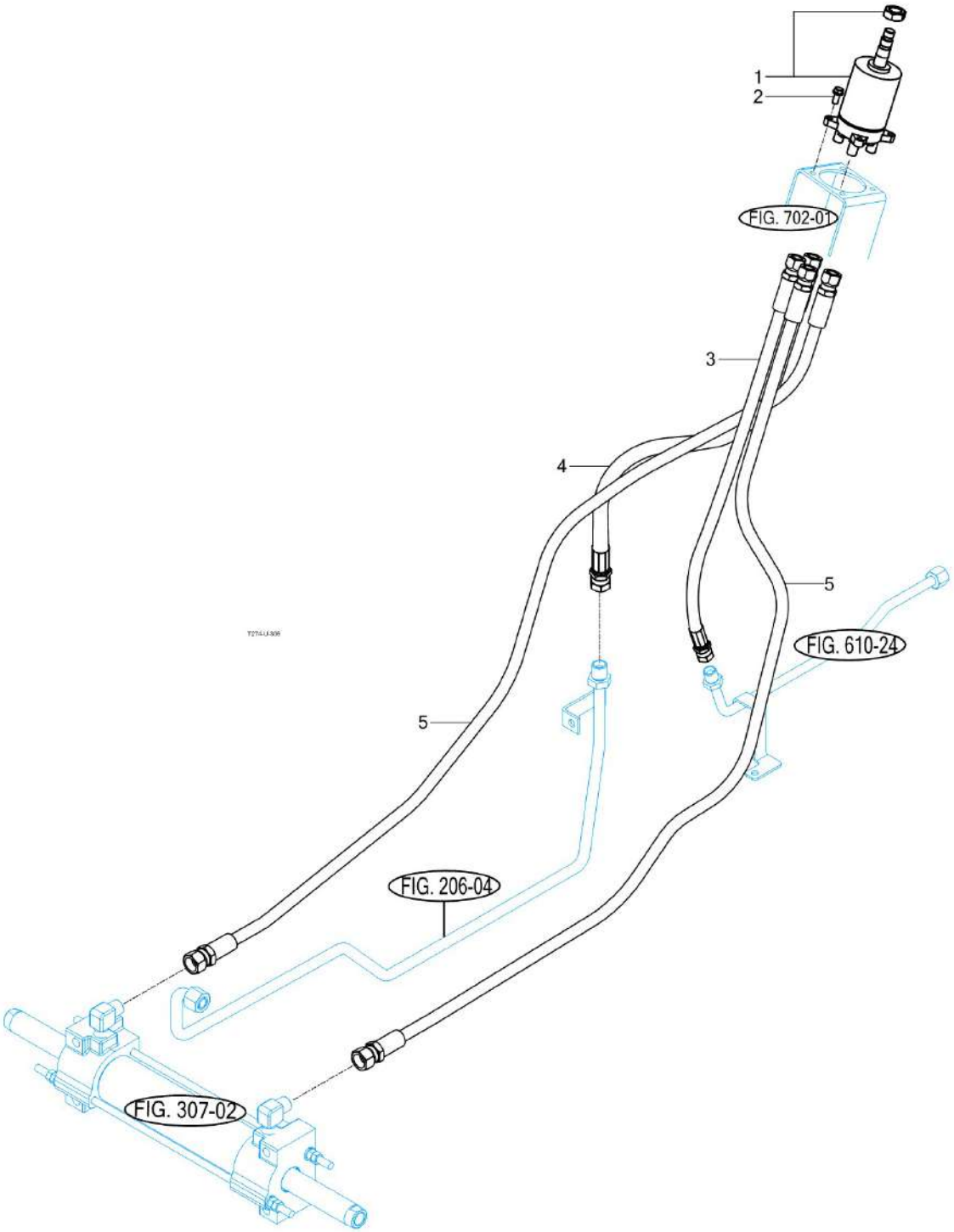

NOTE	

FIG T25NH	STEERING VALVE	년/월 Year/Month 2021-12

KEY NO		PART NO	DESCRIPTION	SPEC	QTY	REPAIR	EFFECTIVE DATE	REMARKS
	1	13154053001	VALVE UNIT , STEERING		1			
	2	V2173608020	BOLT , HEX/S	M8X20	4			
	3	11814073200	HOSE ASSY , HYD 700		1			
	4	13185103200	HOSE ASSY , DRAIN		1			
	5	11815103400	HOSE ASSY , HYD 1240		2			

NOTE	

FIG T25NH	STEERING CYLINDER	년/월 Year/Month 2021-12

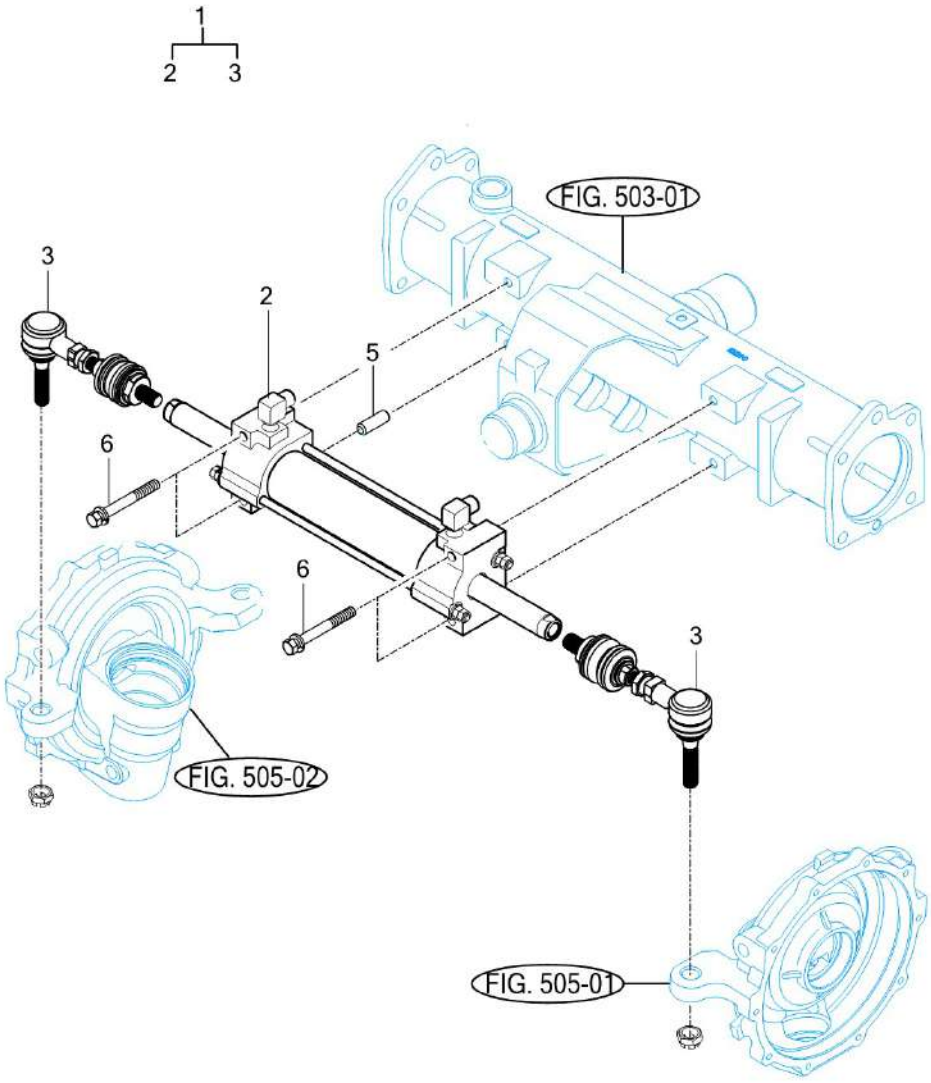

NOTE	

FIG T25NH	STEERING CYLINDER	년/월 Year/Month 2021-12

KEY NO		PART NO	DESCRIPTION	SPEC	QTY	REPAIR	EFFECTIVE DATE	REMARKS
	1	13154055005	CYLINDER ASSY		1			
	2	13154055106	CYLINDER ASSY		1			
	3	13154055204	JOINT SET , BALL		2			
	5	V5201010020	PIN , PARALLEL/A	10X20	1			
	6	V2173610075	BOLT , HEX /S	M10X75	4			

NOTE	

FIG T25NH	FRONT WHEEL	년/월 Year/Month 2021-12

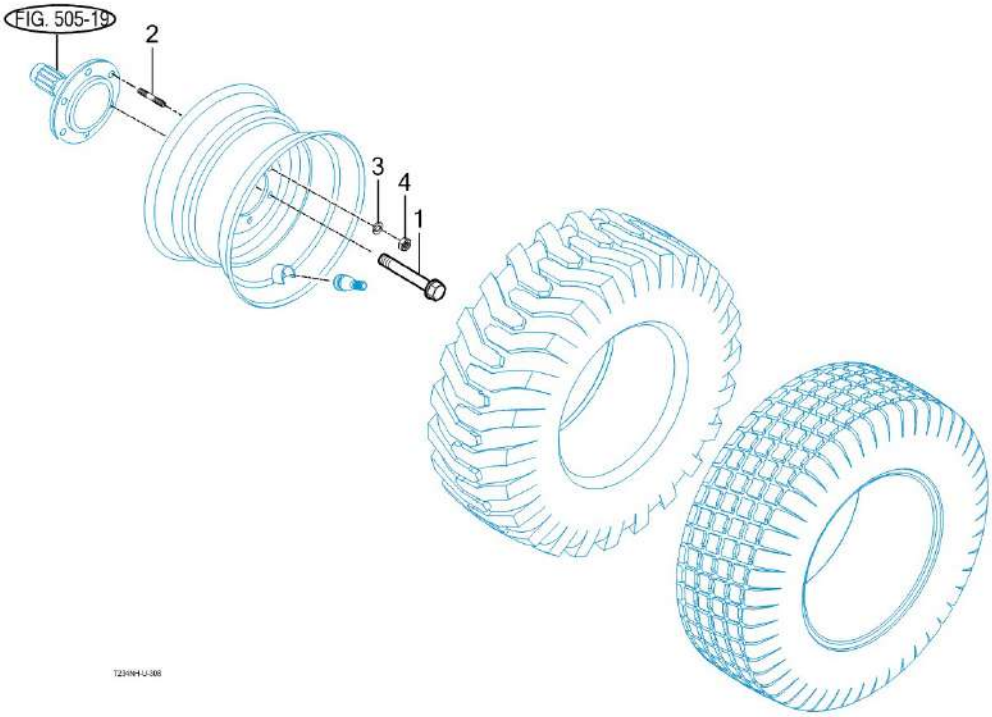

NOTE	

FIG T25NH	FRONT WHEEL	년/월 Year/Month 2021-12

KEY NO		PART NO	DESCRIPTION	SPEC	QTY	REPAIR	EFFECTIVE DATE	REMARKS
	1	V2173612030	BOLT , HEX/S	M12X30	8			
	2	V2513612030	BOLT , STUD/2	M12X30	4			
	3	V4011600120	WASHER , SPRING	M12	4			
	4	V3043600120	NUT , HEX/2	M12	4			

NOTE	

FIG T25NH	REAR WHEEL	년/월 Year/Month 2021-12

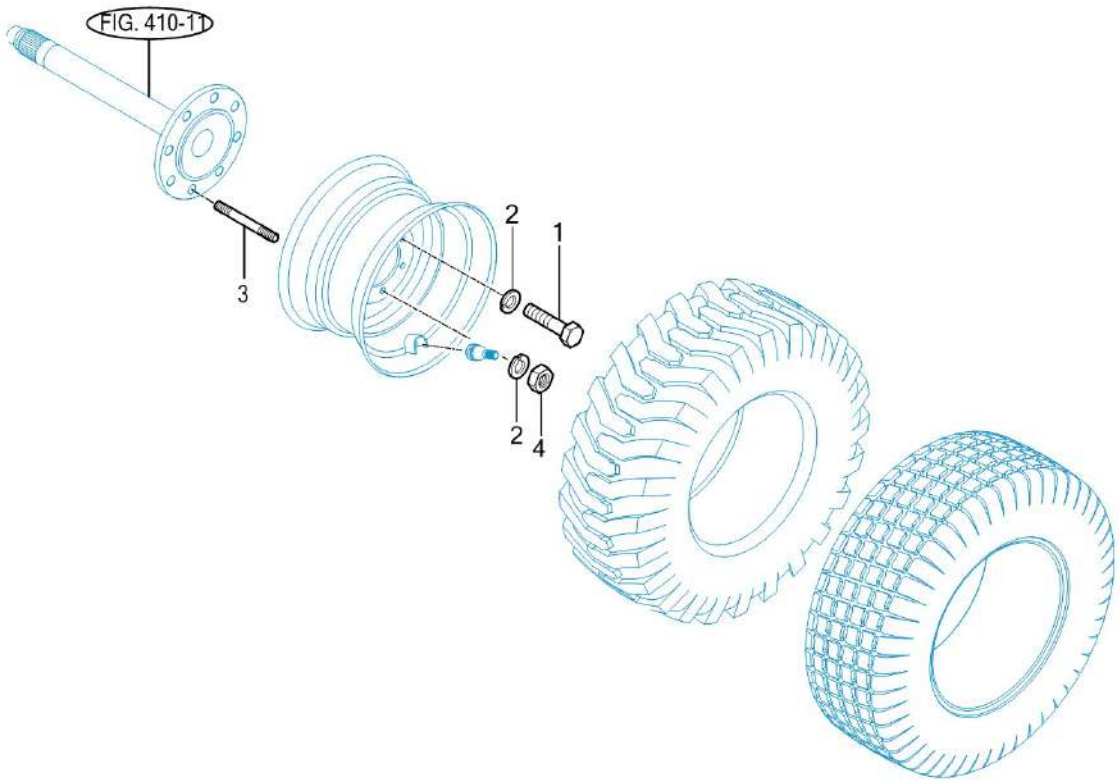

NOTE	

FIG T25NH	REAR WHEEL	년/월 Year/Month 2021-12

KEY NO		PART NO	DESCRIPTION	SPEC	QTY	REPAIR	EFFECTIVE DATE	REMARKS
	1	V2014616030	BOLT , HEX	M16X30	8			
	2	V4011600160	WASHER , SPRING	M16	12			
	3	15603200010	BOLT , STUD M16X30	M16X30	4			
	4	V3043600160	NUT , HEX/2	M16	4			

NOTE	

4. Transmission PART NO. T4

FIG	INPUT SHAFT	76
FIG	HST	78
FIG	4WD DRIVE GEAR	80
FIG	RANGE GEARS	82
FIG	P.T.O DRIVE SHAFT	84
FIG	P.T.O SHAFT	86
FIG	DIFF LOCK	88
FIG	REAR TRANSMISSION CASE	90
FIG	REAR AXLE HOUSINGS	92
FIG	RANGE SHIFT LEVER	94
FIG	P.T.O CHANGE LEVER	96
FIG	4WD CHANGE LEVER	98

FIG T25NH	INPUT SHAFT	년/월 Year/Month 2021-12

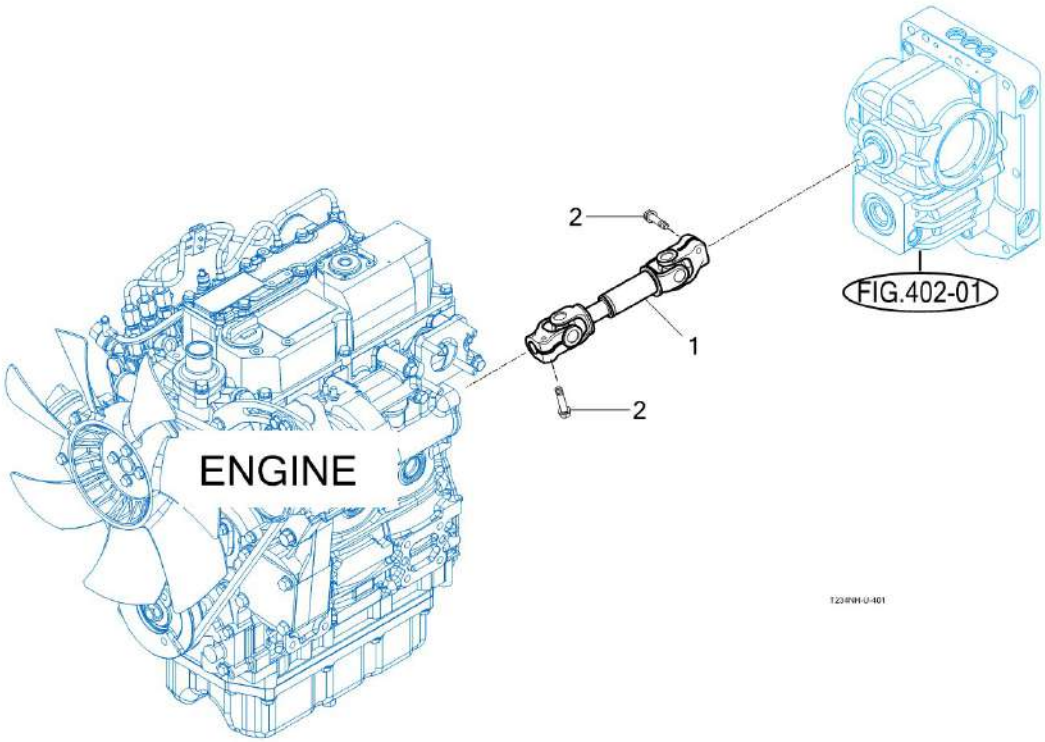

NOTE	

FIG T25NH	INPUT SHAFT	년/월 Year/Month 2021-12

KEY NO		PART NO	DESCRIPTION	SPEC	QTY	REPAIR	EFFECTIVE DATE	REMARKS
	1	13182102100	SHAFT ASSY, DRIVE		1			
	2	V2173608035	BOLT , HEX/S	M8X35	2			

NOTE	

FIG T25NH	HST	년/월 Year/Month 2021-12

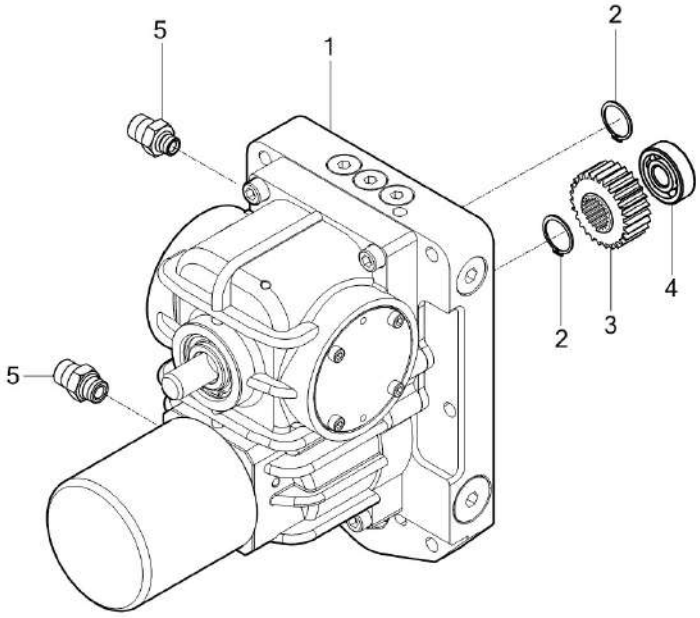

NOTE	

FIG T25NH	HST	년/월 Year/Month 2021-12

KEY NO		PART NO	DESCRIPTION	SPEC	QTY	REPAIR	EFFECTIVE DATE	REMARKS
	1	13152302002	HST UNIT		1			
	2	V7041400200	C-RING , SHAFT	20	2			
	3	13152311020	GEAR , SPUR 19T		1			
	4	V6001106302	BEARING , BALL	6302	1			
	5	16995304000	UNION , O-RING		2			

NOTE	

FIG T25NH	4WD DRIVE GEAR	년/월 Year/Month 2021-12

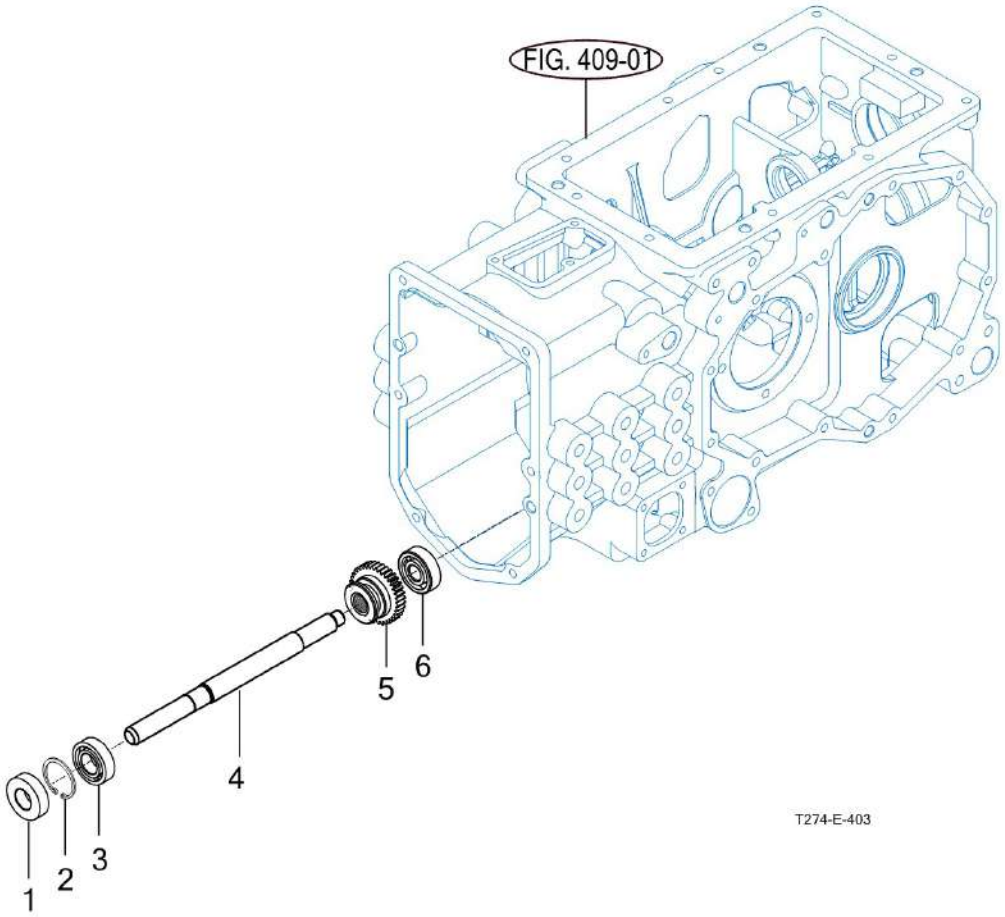

NOTE	

FIG T25NH	4WD DRIVE GEAR	년/월 Year/Month 2021-12

KEY NO		PART NO	DESCRIPTION	SPEC	QTY	REPAIR	EFFECTIVE DATE	REMARKS
	1	V7441204208	SEAL , OIL/D	D20428	1			
	2	V7051400420	C-RING , HOLE	42	1			
	3	V6001106004	BEARING , BALL	6004	1			
	4	13182610010	SHAFT , 4WD		1			
	5	13152610021	GEAR , SPUR 16T		1			
	6	V6001106302	BEARING , BALL	6302	1			

NOTE	

FIG T25NH	RANGE GEARS	년/월 Year/Month 2021-12

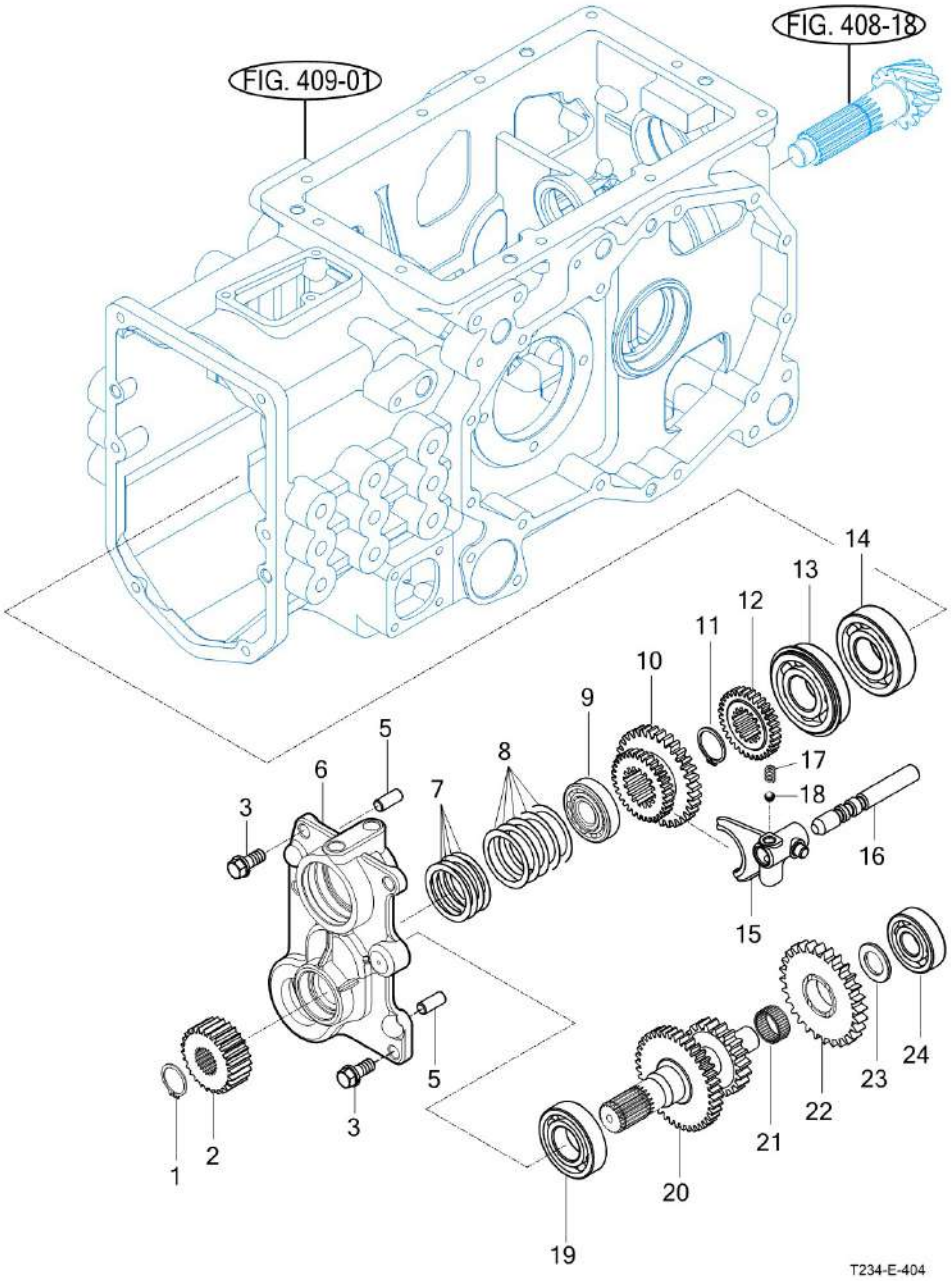

NOTE

FIG T25NH	RANGE GEARS	년/월 Year/Month 2021-12

KEY NO		PART NO	DESCRIPTION	SPEC	QTY	REPAIR	EFFECTIVE DATE	REMARKS
	1	V7041400250	C-RING , SHAFT	25	1			
	2	13152311010	GEAR , SPUR 21T		1			
	3	V2173610025	BOLT , HEX/S	M10X25	4			
	5	V5201010022	PIN , PARALLEL/A	10X22	2			
	6	13152400024M	METAL , BEARING		1			
	7	13153020010	SHIM , 0.1		4			
	8	13153020020	SHIM , 0.2		5			
	9	V6321130304	BEARING, TAPER ROLLER	30304J	1			
	10	13152411010	GEAR , SPUR 17-27T		1			
	11	V7041400280	C-RING , SHAFT	28	1			
	12	13152611010	GEAR , SPUR 17T		1			
	13	V6001606306	BEARING , BALL	6306N	1			
	14	V6041106306	BEARING , BALL/HL1	6306HL1	1			
	15	13152430012M	FORK , RANGE		1			
	16	13152430022	STAY , RANGE		1			
	17	13022250030	SPRING , SHIFTER		1			
	18	V6802000010	BALL , STEEL	5/16	1			
	19	V6041106206	BEARING , BALL/HL1	6206HL1	1			
	20	13152421011	GEAR , SPUR 19-28T		1			
	21	V6544252913	BEARING , NEEDLE CAGED	KT252913	1			
	22	13152611020	GEAR , SPUR 28T		1			
	23	14602130030	WASHER , 20X34X3		1			
	24	V6041106304	BEARING , BALL/HL1	6304HL1	1			

NOTE	

FIG T25NH	P.T.O DRIVE SHAFT	년/월 Year/Month 2021-12

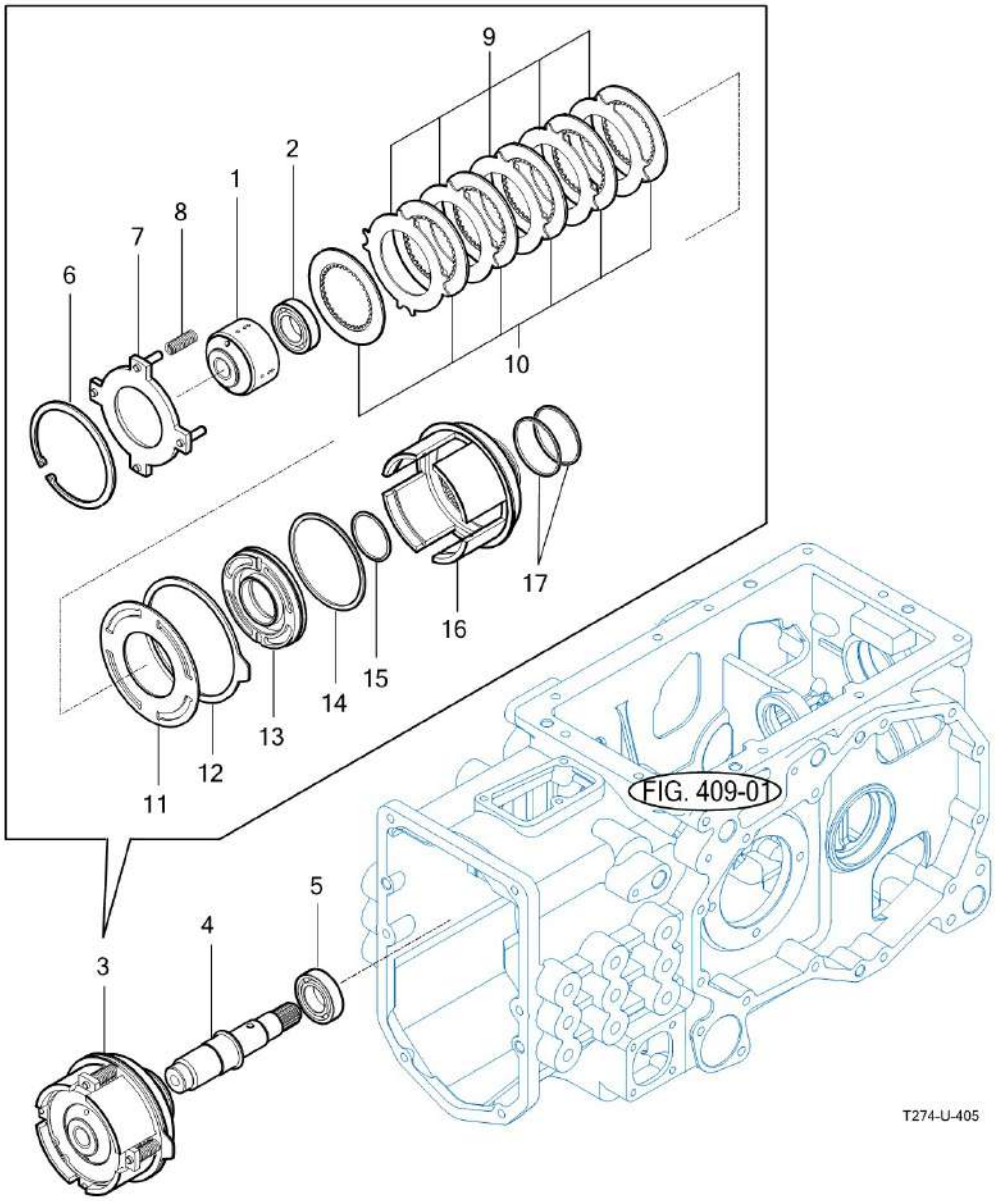

NOTE	

FIG T25NH	P.T.O DRIVE SHAFT	년/월 Year/Month 2021-12

KEY NO		PART NO	DESCRIPTION	SPEC	QTY	REPAIR	EFFECTIVE DATE	REMARKS
	1	13152171021	HUB, PTO CLUTCH		1			
	2	V6001106005	BEARING , BALL	6005	1			
	3	13152212000	CLUTCH ASSY , PTO CLUTCH		1			
	4	13152171011	SHAFT , PTO CLUTCH		1			
	5	V6001106005	BEARING , BALL	6005	1			
	6	V7051400950	C-RING , HOLE	95	1			
	7	16702212030	PLATE ASSY		1			
	8	14722212040	SPRING		4			
	9	16342212050	CLUTCH , PLATE		5			
	10	15642212050	CLUTCH , DISK		6			
	11	15642212060	PLATE , RETURN		1			
	12	14722212070	DISC		1			
	13	14722212020	PISTON		1			
	14	15642212080	SEAL , A		1			
	15	14722212090	RING , PISTON		1			
	16	14722212010	CASE		1			
	17	14462162180	SEAL , B		2			

NOTE	

FIG T25NH	P.T.O SHAFT	년/월 Year/Month 2021-12

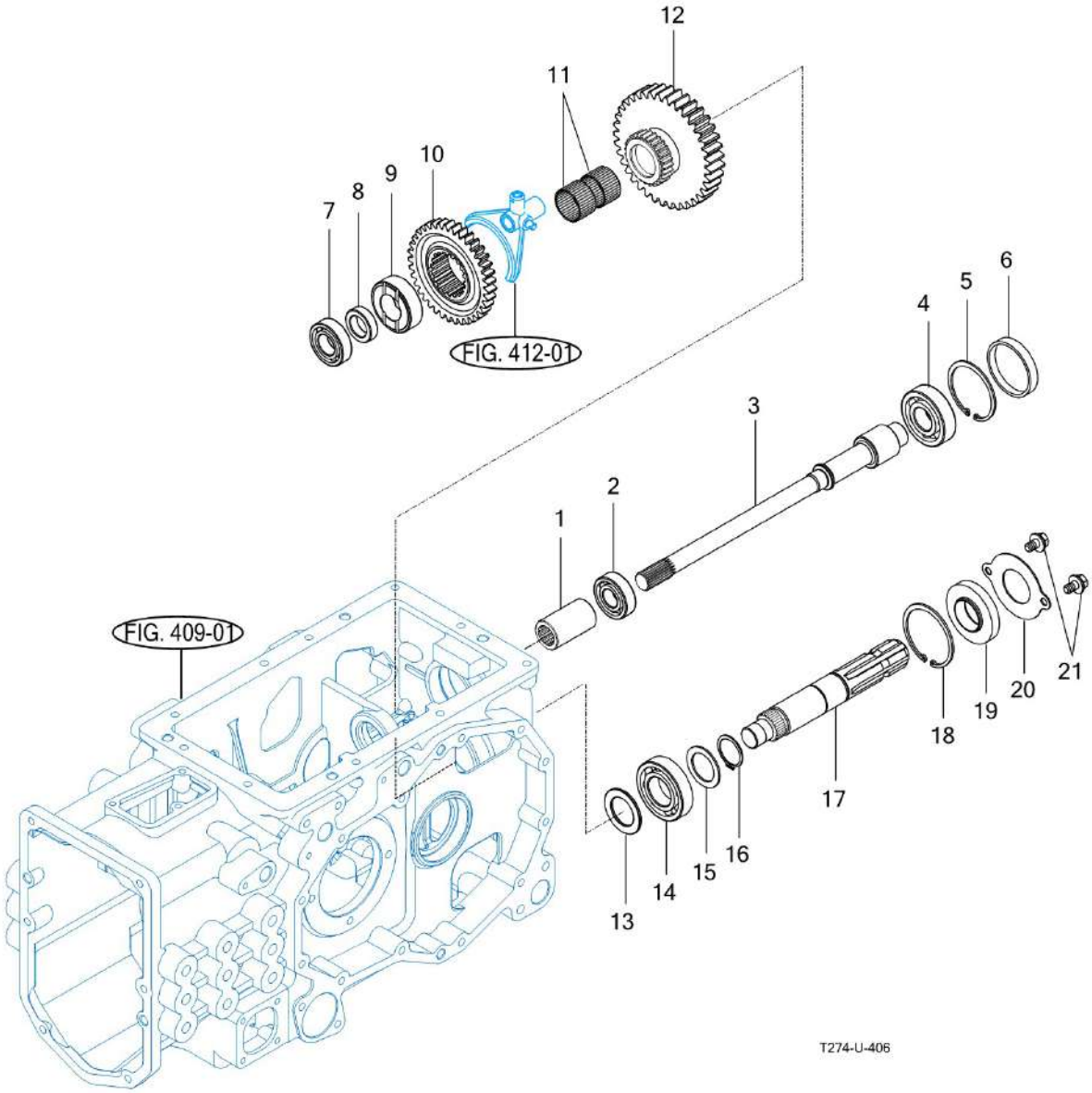

NOTE	

FIG T25NH	P.T.O SHAFT	년/월 Year/Month 2021-12

KEY NO		PART NO	DESCRIPTION	SPEC	QTY	REPAIR	EFFECTIVE DATE	REMARKS
	1	14211340190	COUPLING		1			
	2	V6001106204	BEARING , BALL	6204	1			
	3	11812510010	SHAFT , PTO		1			
	4	V6001106305	BEARING , BALL	6305	1			
	5	V7051400620	C-RING , HOLE	62	1			
	6	14443140080	SEAL , 62		1			
	7	V6001106205	BEARING , BALL	6205	1			
	8	13152530041	COLLAR ,25X40X12		1			
	9	15642730052	HUB , 35X62X20		1			
	10	13152530031	GEAR , SPUR 41T		1			
	11	V6544354026	BEARING , NEEDLE CAGED		2			
	12	11812530020	GEAR , SPUR 53T		1			
	13	15642730082	WASHER , 35X55X3		1			
	14	V6001106207	BEARING , BALL	6207	1			
	15	14443140041	COLLAR , 35X50X2		1			
	16	V7041400350	C-RING , SHAFT	35	1			
	17	13152530011	SHAFT , PTO		1			
	18	V7051400720	C-RING , HOLE	72	1			
	19	16322732000	SEAL ASSY , OIL		1			
	20	16322730040	COVER		1			
	21	V2183608016	BOLT , HEX/SP		2			

NOTE	

FIG T25NH	DIFF LOCK	년/월 Year/Month 2021-12

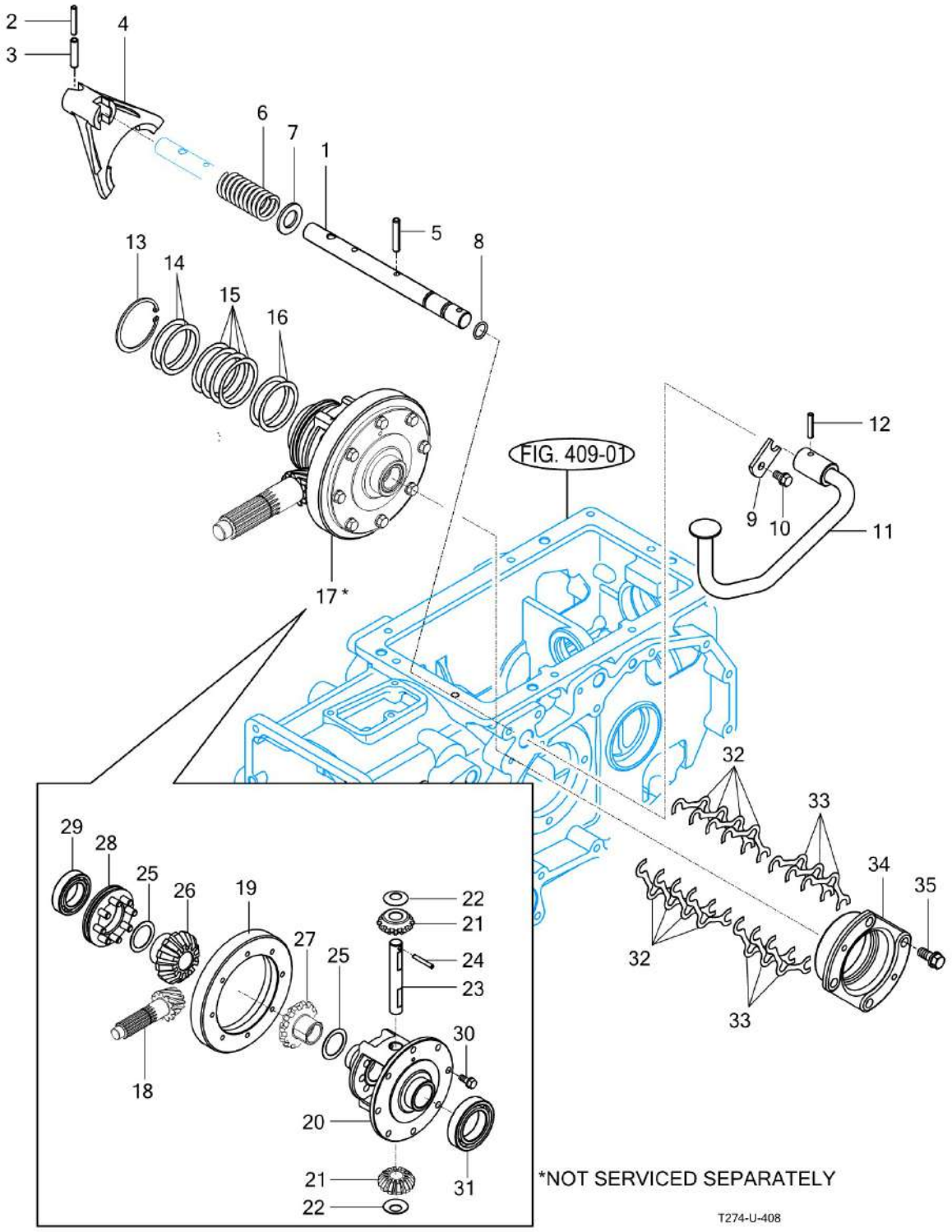

NOTE	

FIG T25NH	DIFF LOCK	년/월 Year/Month 2021-12

KEY NO		PART NO	DESCRIPTION	SPEC	QTY	REPAIR	EFFECTIVE DATE	REMARKS
	1	13153190020	SHAFT , DIFF LOCK		1			
	2	V5801405036	PIN , SPRING	5X36	1			
	3	V5801408036	PIN , SPRING	8X36	1			
	4	13153190010M	FORK , DIFF LOCK		1			
	5	V5801406032	PIN , SPRING	6X32	1			
	6	17973030420	SPRING		1			
	7	V4111600200	WASHER , PLAIN	M20	1			
	8	V7201024016	O-RING , P	P16	1			
	9	16703180191	PLATE , STOP		1			
	10	V2173608016	BOLT , HEX/S	M8X16	1			
	11	13153193100	PEDAL COMP , DIFF LOCK		1			
	12	V5801408036	PIN , SPRING	8X32	1			
	13	V7051400620	C-RING , HOLE	62	1			
	14	13153180110	SHIM , 0.5		3			
	15	13153180130	SHIM , 0.2		4			
	16	13153180120	SHIM , 0.1		3			
	17	13403002000	DIFF ASSY , RR		1			
	18	13153002110	PINION , DRIVE 9T		1			
	19	13153002120	GEAR , BEVEL 55T		1			
	20	13153180011M	CASE , DIFF		1			
	21	14443180040	PINION , DIFF 12T		2			
	22	14443180050	COLLAR , PINION THRUST		2			
	23	13153180070	SHAFT , DIFF PINION		1			
	24	V5801405036	PIN , SPRING	5X36	1			
	25	13153180080	WASHER, THRUST 34X46X1		2			
	26	13153180030	GEAR , BEVEL RH 20T		1			
	27	13153180060	GEAR , BEVEL LH 20T		1			
	28	13153182100	CLUTCH COMP , DIFF LOCK		1			
	29	V6001106007	BEARING , BALL	6007	1			
	30	V2173608020	BOLT , HEX/S	M8X20	8			
	31	V6001106009	BEARING , BALL	6009	1			
	32	13153181030	SHIM , 0.2		8			
	33	13153181020	SHIM , 0.1		6			
	34	13153181010M	METAL , DIFF CASE		1			
	35	V2173610025	BOLT , HEX/S		4			

NOTE	

FIG T25NH	REAR TRANSMISSION CASE	년/월 Year/Month 2021-12

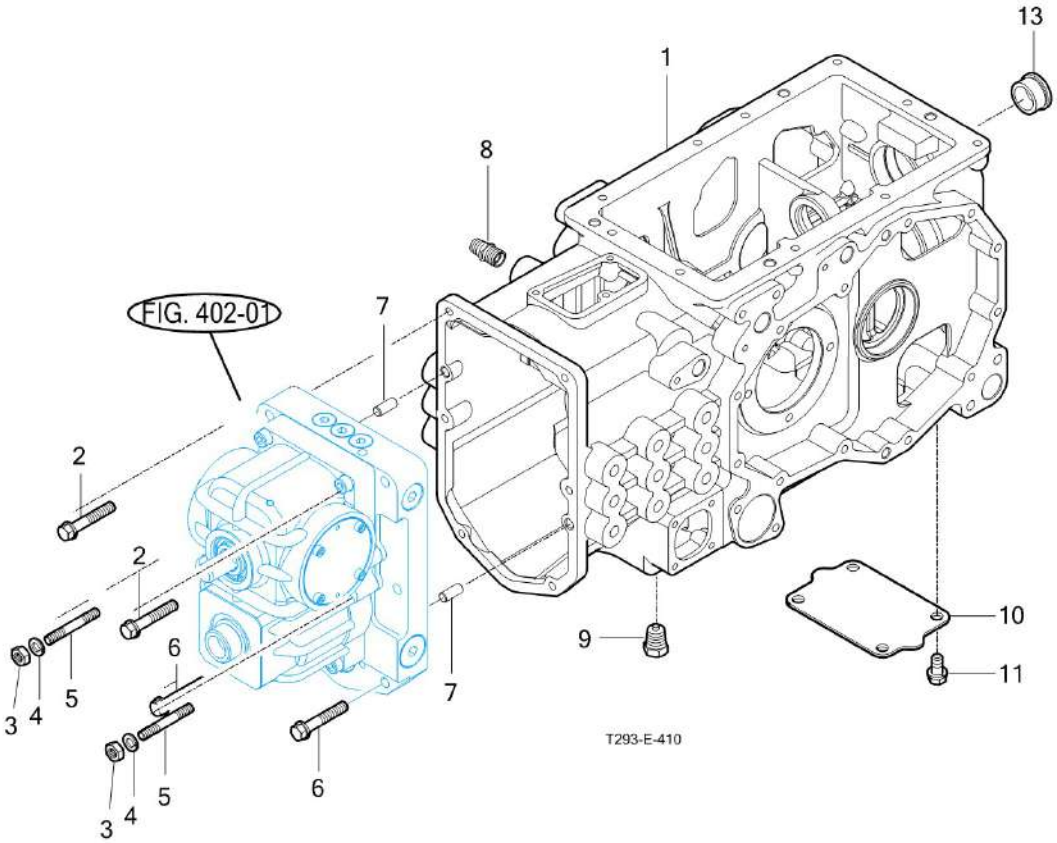

NOTE	

FIG T25NH	REAR TRANSMISSION CASE	년/월 Year/Month 2021-12

KEY NO		PART NO	DESCRIPTION	SPEC	QTY	REPAIR	EFFECTIVE DATE	REMARKS
	1	13152400018M	CASE , TRANSMISSION RR		1			
	2	V2173610060	BOLT , HEX/S	M10X60	2			
	3	V3043600100	NUT , HEX/2	M10	2			
	4	V4011600100	WASHER , SPRING	M10	2			
	5	V2513410045	BOLT , STUD/2	M10X45	2			
	6	V2173610040	BOLT , HEX/S	M10X40	2			
	7	V5201010022	PIN , PARALLEL/A	10X22	2			
	8	16994080061	UNION , PT3/8 M18		1			
	9	16701015001	PLUG ASSY , DRAIN (MAGNET)		1			
	10	13152401011	PLATE		1			
	11	V2173610020	BOLT , HEX/S	M10X20	4			
	13	11103062000	GAUGE ASSY , OIL LEVEL		1			

NOTE	

FIG T25NH	REAR AXLE HOUSINGS	년/월 Year/Month 2021-12

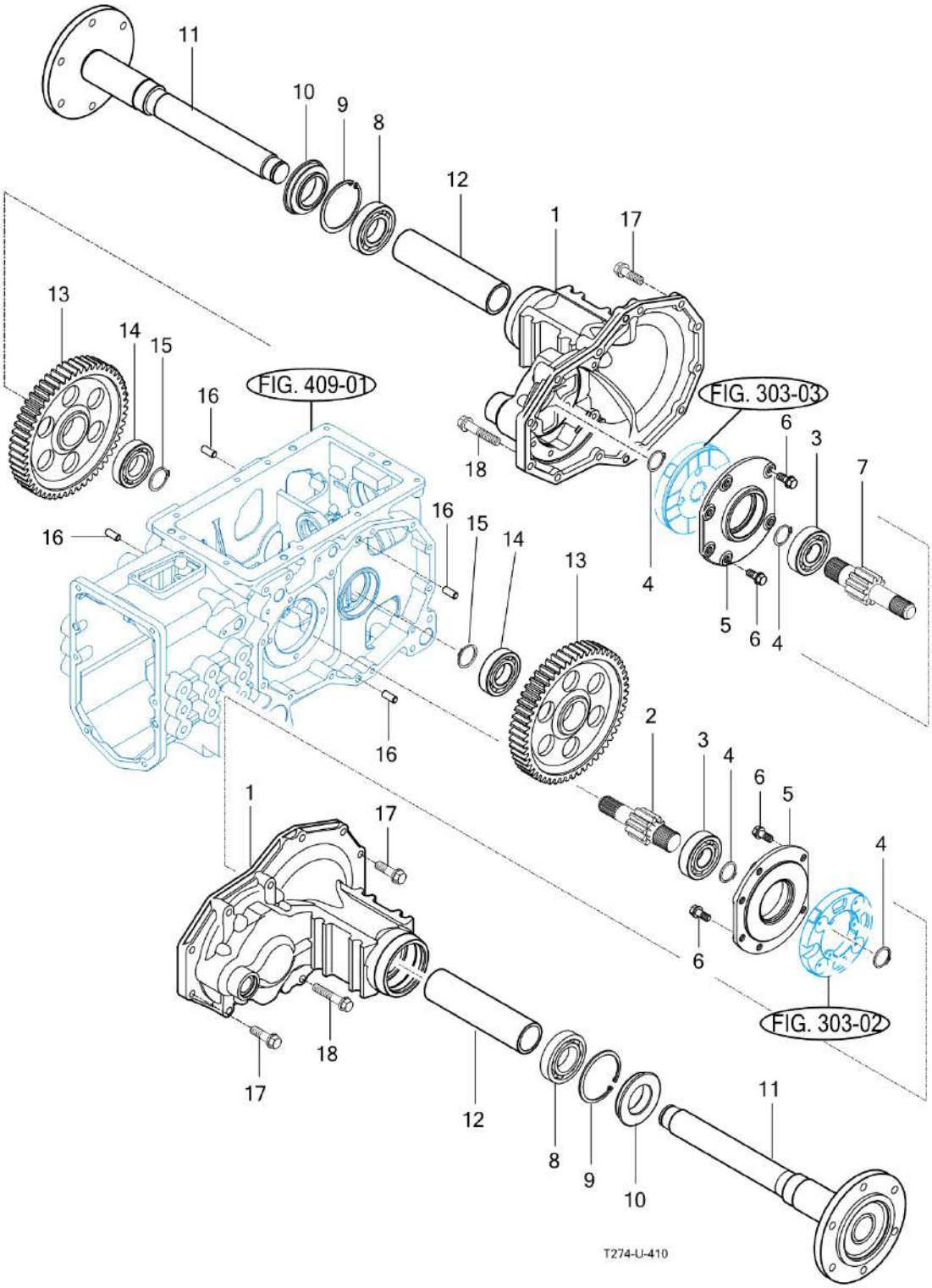

NOTE	

FIG T25NH	REAR AXLE HOUSINGS	년/월 Year/Month 2021-12

KEY NO		PART NO	DESCRIPTION	SPEC	QTY	REPAIR	EFFECTIVE DATE	REMARKS
	1	13153200011M	HOUSING , AXLE		2			
	2	13153230012	SHAFT , WHEEL PINION LH		1			
	3	V6001106306	BEARING , BALL	6306	2			
	4	V7041400300	C-RING , SHAFT	30	4			
	5	13153270010M	COVER , BRAKE		2			
	6	V2173610025	BOLT , HEX/S	M10X25	12			
	7	13153230022	SHAFT , WHEEL PINION RH		1			
	8	V6001106208	BEARING , BALL	6208	2			
	9	V7051400800	C-RING , HOLE	80	2			
	10	13153240030	SEAL , SHAFT		2			
	11	13153240010M	SHAFT , WHEEL		2			
	12	13153240041	COLLAR , 51X5X198		2			
	13	13153240022	GEAR , SPUR 71T		2			
	14	V6001106207	BEARING , BALL	6207	2			
	15	V7041400350	C-RING , SHAFT	35	2			
	16	V5201010022	PIN , PARALLEL/A	10X22	4			
	17	V2173610035	BOLT , HEX/S	M10X35	16			
	18	V2173610055	BOLT , HEX/S	M10X55	8			

NOTE	

FIG T25NH	RANGE SHIFT LEVER	년/월 Year/Month 2021-12

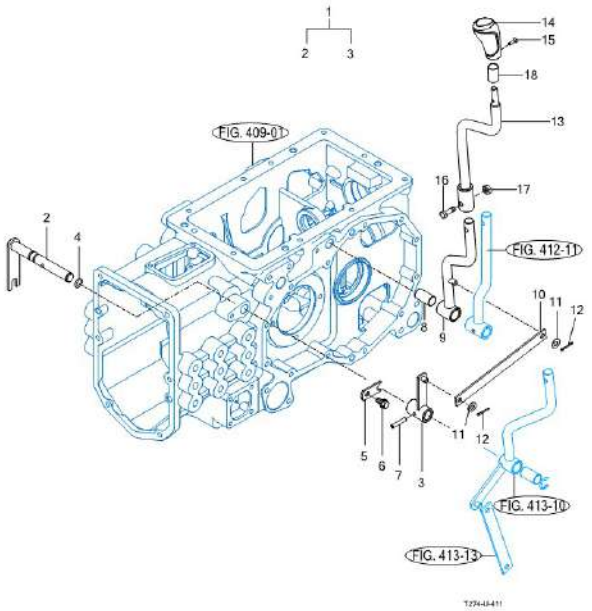

NOTE	

FIG T25NH	RANGE SHIFT LEVER	년/월 Year/Month 2021-12

KEY NO		PART NO	DESCRIPTION	SPEC	QTY	REPAIR	EFFECTIVE DATE	REMARKS
	1	13152444002	HOOK SET , RANGE		1			
	2	13152444101	HOOK COMP , RANGE		1			
	3	13152444302	HUB COMP ,RANGE		1			
	4	V7201024012	O-RING , P	P12	1			
	5	16702230371	PLATE		1			
	6	V2173608016	BOLT , HEX/S	M8X16	1			
	7	V5801406032	PIN , SPRING	6X32	1			
	8	17995070270	BUSH , 16X18X33		1			
	9	11812444200	LEVER COMP , RANGE		1			
	10	13152440050	LINK		1			
	11	V4111600080	WASHER , PLAIN	M8	2			
	12	V5001925020	PIN D2.5x20	2.5X20	2			
	13	11812444300GB	RANGE LEVER (UPR) COMP	M10	1			
	14	11817513200	GRIP(CHANGE RANGE)		1			
	15	V1122804012	SCREW , C/R FLAT		1			
	16	V2013608035	BOLT , HEX		1			
	17	V3042600080	NUT , HEX/2		1			
	18	13632444620	HOSE , 60		1			
	18	11103160020	TUBE		1			

NOTE	

FIG T25NH	P.T.O CHANGE LEVER	년/월 Year/Month 2021-12

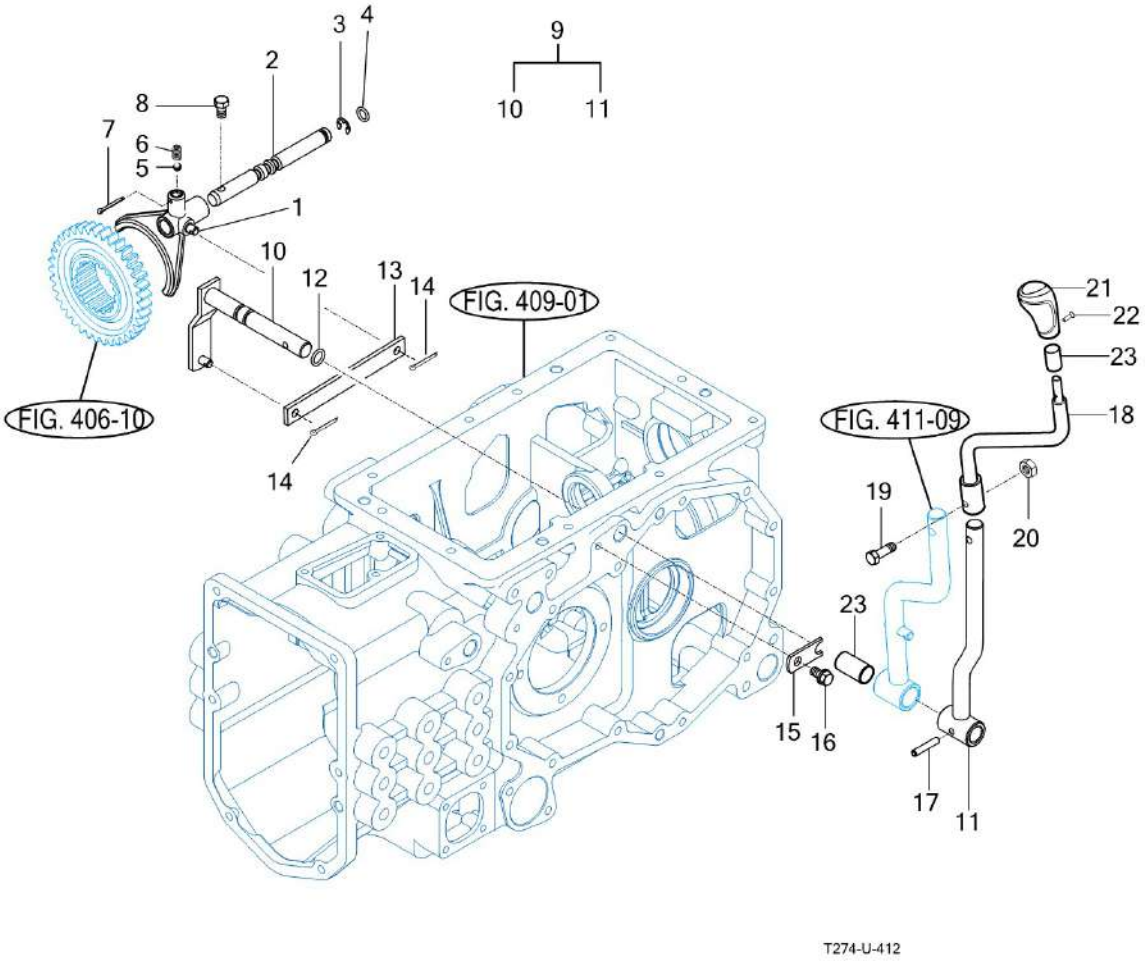

NOTE	

FIG T25NH	P.T.O CHANGE LEVER	년/월 Year/Month 2021-12

KEY NO		PART NO	DESCRIPTION	SPEC	QTY	REPAIR	EFFECTIVE DATE	REMARKS
	1	13152540011M	FORK , PTO		1			
	2	13152540022	STAY , PTO		1			
	3	V7081400100	E-RING		1			
	4	V7201024010	O-RING , P	P10A	1			
	5	V6802000010	BALL , STEEL	5/16	1			
	6	13022250030	SPRING , SHIFTER		1			
	7	V5001930025	PIN , SPLIT	3X25	1			
	8	15602231610	BOLT , SET M8X16		1			
	9	13152542002	ARM SET , PTO		1			
	10	13152542102	ARM COMP , PTO		1			
	11	13152542201	LEVER COMP , PTO(LOW)		1			
	12	V7201024012	O-RING , P	P12	1			
	13	13152540030	PLATE , CHANGE		1			
	14	V5001925020	PIN D2.5x20	2.5X20	2			
	15	16702230371	PLATE		1			
	16	V2173608016	BOLT , HEX/S	M8X16	1			
	17	V5801406032	PIN , SPRING	6X32	1			
	18	11812543100GB	PTO LEVER (UPR) COMP		1			
	19	V2013608035	BOLT , HEX		1			
	20	V3042600080	NUT , HEX/2		1			
	21	11817513300	GRIP(PTO)		1			
	22	V1122804012	SCREW , C/R FLAT		1			
	23	13632444620	HOSE , 60		1			
	23	11103160020	TUBE		1			

NOTE	

FIG T25NH	4WD CHANGE LEVER	년/월 Year/Month 2021-12

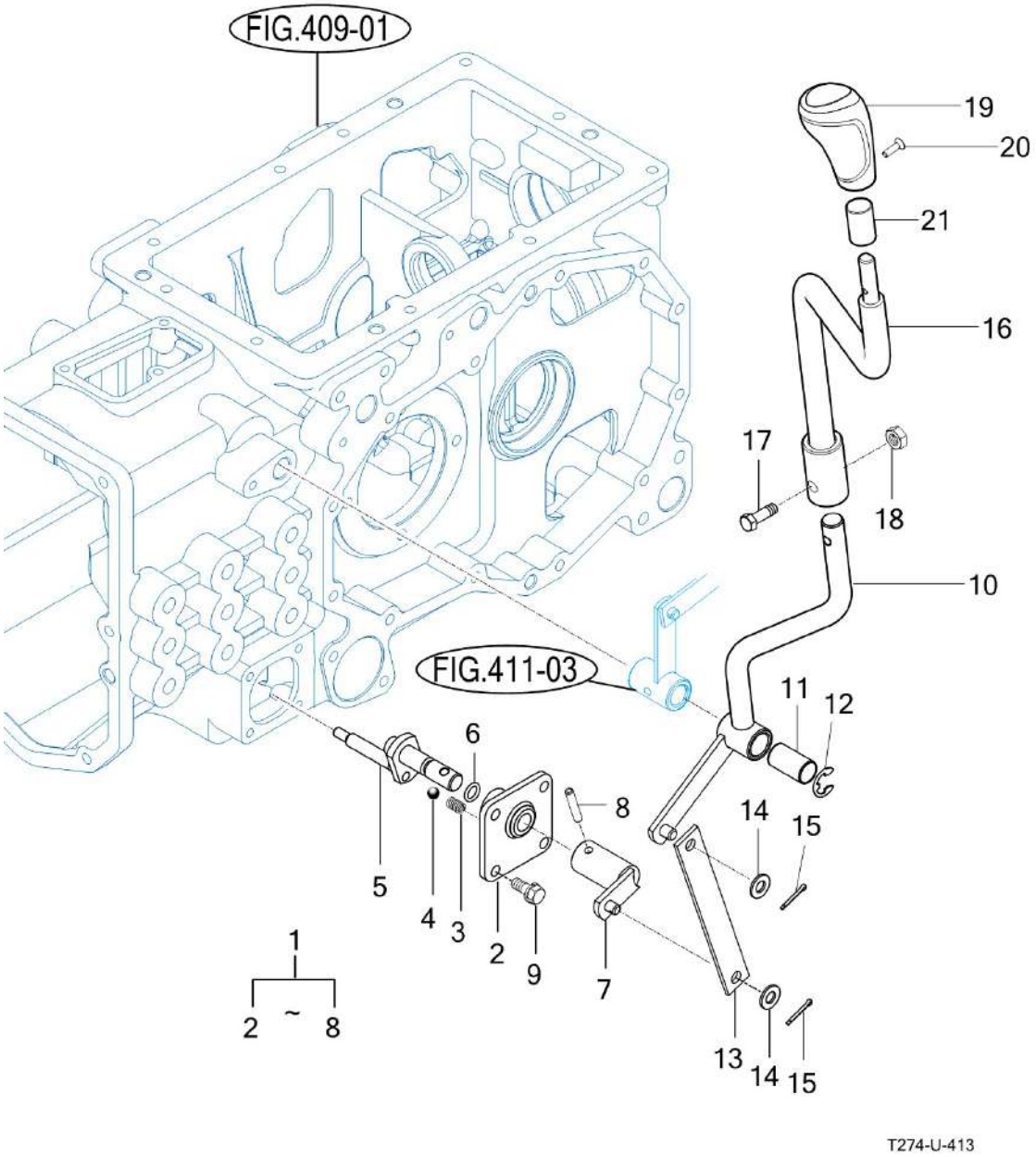

NOTE	

FIG T25NH	4WD CHANGE LEVER	년/월 Year/Month 2021-12

KEY NO		PART NO	DESCRIPTION	SPEC	QTY	REPAIR	EFFECTIVE DATE	REMARKS
	1	13402632001	ARM SUB ASSY , 4WD		1			
	2	14443120010M	BOSS		1			
	3	13022250030	SPRING , SHIFTER		1			
	4	V6802000010	BALL , STEEL	5/16	1			
	5	14572622101	ARM COMP , 4WD		1			
	6	V7201024010	O-RING , P	P10A	1			
	7	13152632201	ARM COMP		1			
	8	V5801406032	PIN , SPRING	6X32	1			
	9	V2173608020	BOLT , HEX/S	M8X20	4			
	10	13152632102	LEVER COMP , 4WD(LOW)		1			
	10	13152632103	LEVER COMP , 4WD(LOW)		1			
	11	17995070270	BUSH , 16X18X33		1			
	12	V7081400120	E-RING	12	1			
	13	13152630011	LINK , 4WD		1			
	14	V4111600080	WASHER , PLAIN	M8	2			
	15	V5001925020	PIN D2.5x20	2.5X20	2			
	16	11812632300GB	4WD LEVER (UPR) COMP		1			
	16	11812632301GB	4WD LEVER (UPR) COMP		1			
	17	V2013608035	BOLT , HEX	M8X30	1			
	18	V3042600080	NUT , HEX/2	M8	1			
	19	11817513200	GRIP(CHANGE RANGE)		1			
	20	V1122804012	SCREW , C/R FLAT		1			
	21	13632444620	HOSE , 60		1			
	21	11103160020	TUBE		1			

NOTE	

5. Front Axle PART NO. T5

FIG	FRAME	101
FIG	FRONT DIFFERENTIAL GEARS & SHAFT	103
FIG	FRONT AXLE HOUSING	105
FIG	FRONT GEAR CASE (1)	107
FIG	FRONT GEAR CASE (2)	109

FIG T25NH	FRAME	년/월 Year/Month 2021-12

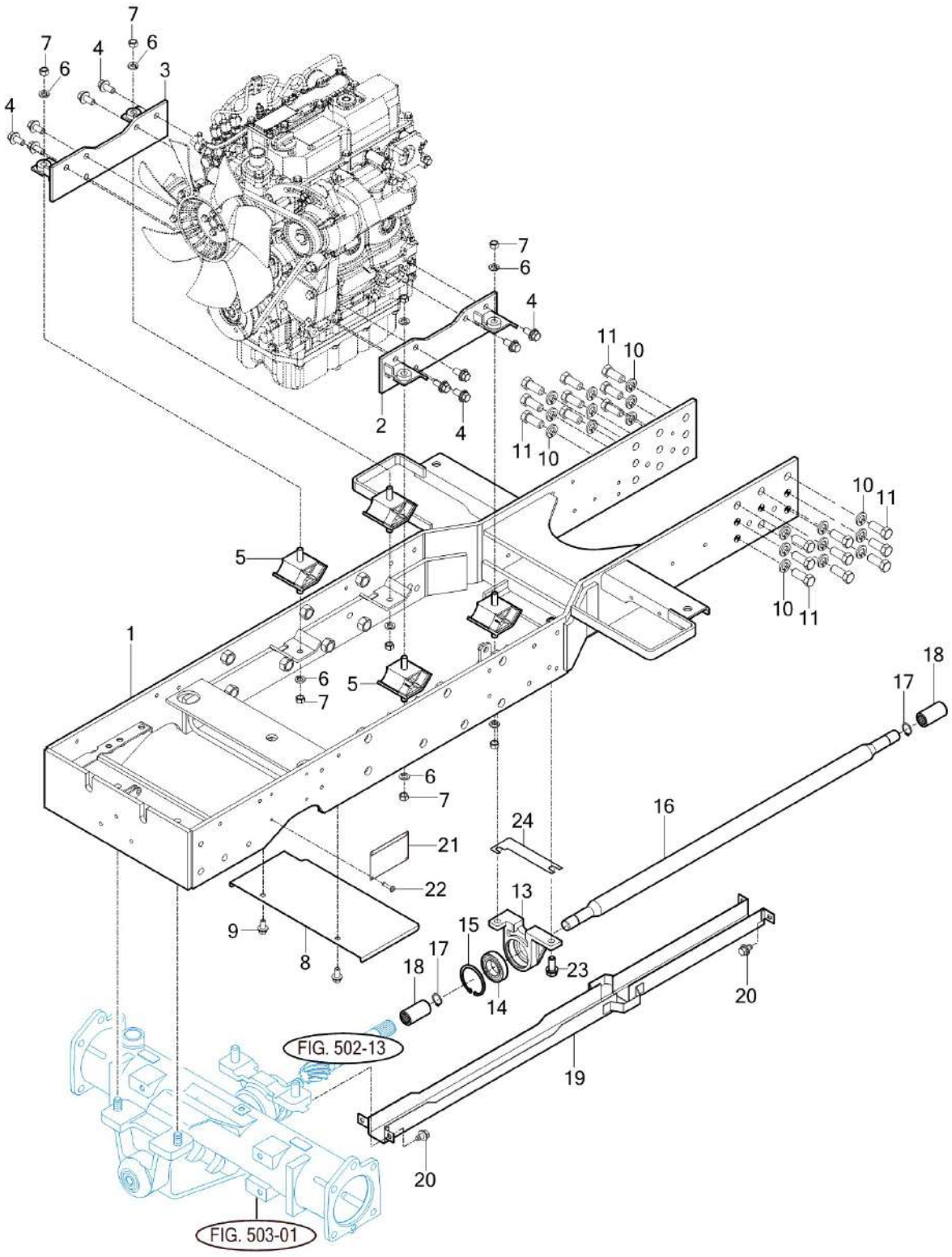

NOTE

FIG T25NH	FRAME	년/월 Year/Month 2021-12

KEY NO		PART NO	DESCRIPTION	SPEC	QTY	REPAIR	EFFECTIVE DATE	REMARKS
	1	11814072000GB	FRAME COMP , MAIN		1			
	1	11814072000ED	FRAME COMP , MAIN		1			
	2	11811074100GB	BRACKET COMP , MOUNT LH		1			
	3	11811074200GB	BRACKET COMP , MOUNT RH		1			
	4	V2183610025	BOLT , HEX/SP		10			
	5	36501510110	RUBBER , E/G MOUNT		4			
	6	V4011600100	WASHER , SPRING		8			
	7	V3042600100	NUT , HEX/2		8			
	8	11811811500GB	WIND PLATE		1			
	9	V2183608016	BOLT , HEX/SP		2			
	10	V4011600140	WASHER , SPRING		18			
	11	11104070020	SHOULDER BOLT , M14X30		18			
	13	11814103110M	SUPPORT , 4WD		1			
	14	V6001506006	BEARING , BALL		1			
	15	V7051400550	C-RING , HOLE		1			
	16	11814100010	SHAFT , 4WD		1			
	17	V7041400200	C-RING , SHAFT		2			
	18	14211340190	COUPLING		2			
	19	11814102100GB	SHIELD COMP , 4WD		1			
	20	V2183608016	BOLT , HEX/SP		4			
	21	T0019010021	LABEL , MODEL/EXPORT		1			
	21	T0019110050	NAMEPLATE , USA		1			
	22	V5502040093	RIVET , BLIND		4			
	23	V2173610030	BOLT , HEX/S		2			
	24	11814103210	SHIM, 0.5		1			

NOTE	

FIG T25NH	FRONT DIFFERENTIAL GEARS & SHAFT	년/월 Year/Month 2021-12

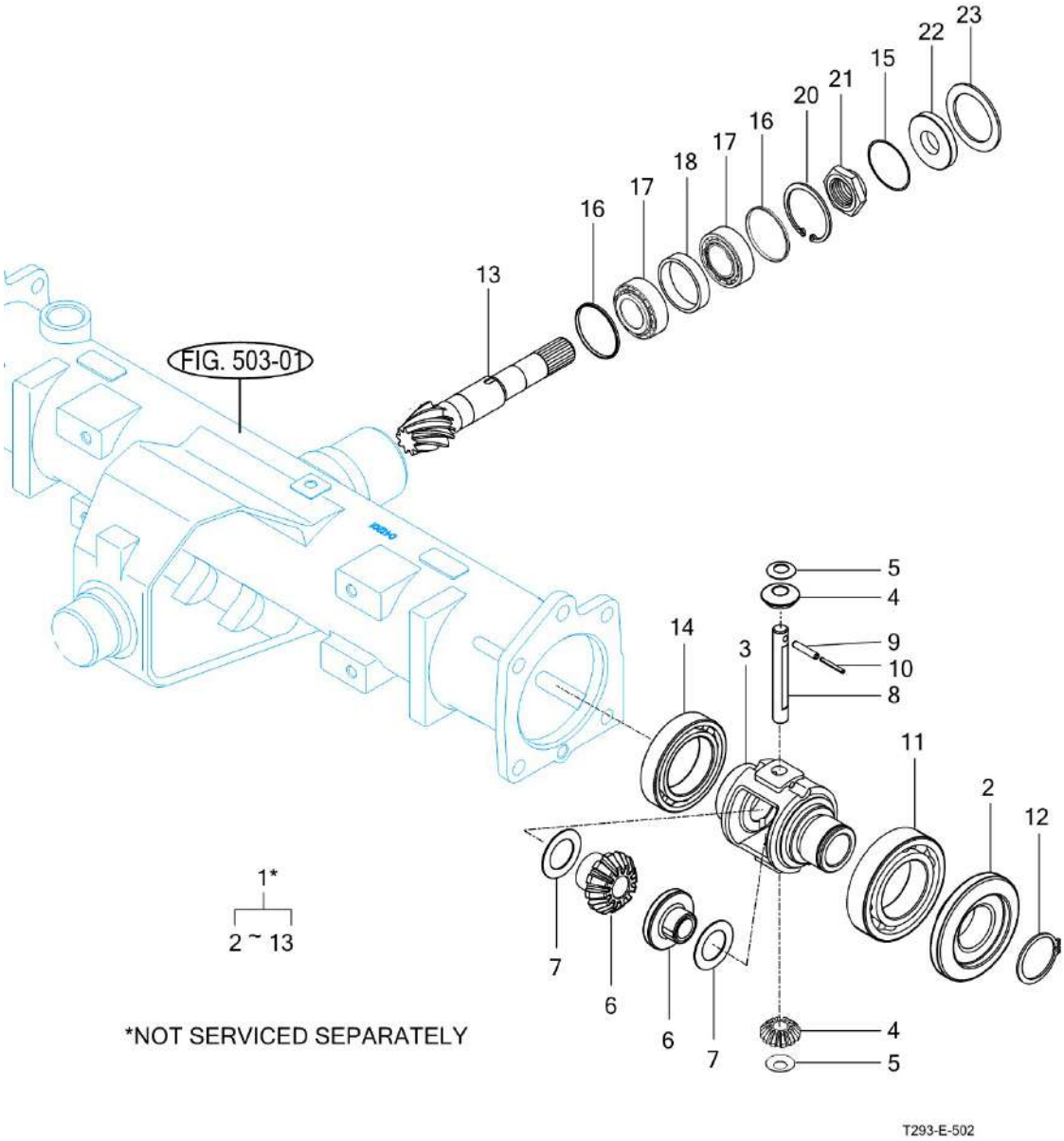

NOTE	

FIG T25NH	FRONT DIFFERENTIAL GEARS & SHAFT	년/월 Year/Month 2021-12

KEY NO		PART NO	DESCRIPTION	SPEC	QTY	REPAIR	EFFECTIVE DATE	REMARKS
	1	13754112000	DIFF ASSY , FR		1			
	2	13154112210	GEAR , BEVEL 25T		1			
	3	13154112260	CASE , FR DIFF		1			
	4	13154112231	PINION , DIFF 10T		2			
	5	13154112240	WASHER , THRUST		2			
	6	13154112221	GEAR , 20T DIFF SIDE		2			
	7	13154112250	WASHER , THRUST		2			
	8	13154112270	SHAFT , DIFF PINION		1			
	9	V5801405025	PIN , SPRING	5X25	1			
	10	V5801403025	PIN , SPRING	3X25	1			
	11	V6001106210	BEARING , BALL	6210	1			
	12	V7041400400	C-RING , SHAFT	40	1			
	13	13154112110	PINION , BEVEL 8T		1			
	14	V6001106010	BEARING , BALL	6010	1			
	15	13154112170	SHIM , B		1			
	16	13154112141	SPACER(45X47X3)		2			
	17	V6321133005	BEARING , TAPER-ROLLER	33005J	2			
	18	13154112120	COLLAR		1			
	20	V7051400470	C-RING , HOLE	47	1			
	21	13154112131	NUT , M25		1			
	22	V7442204707	SEAL , OIL/D	D204707	1			
	23	13154112150	SPACER		1			

NOTE	

FIG T25NH	FRONT AXLE HOUSING	년/월 Year/Month 2021-12

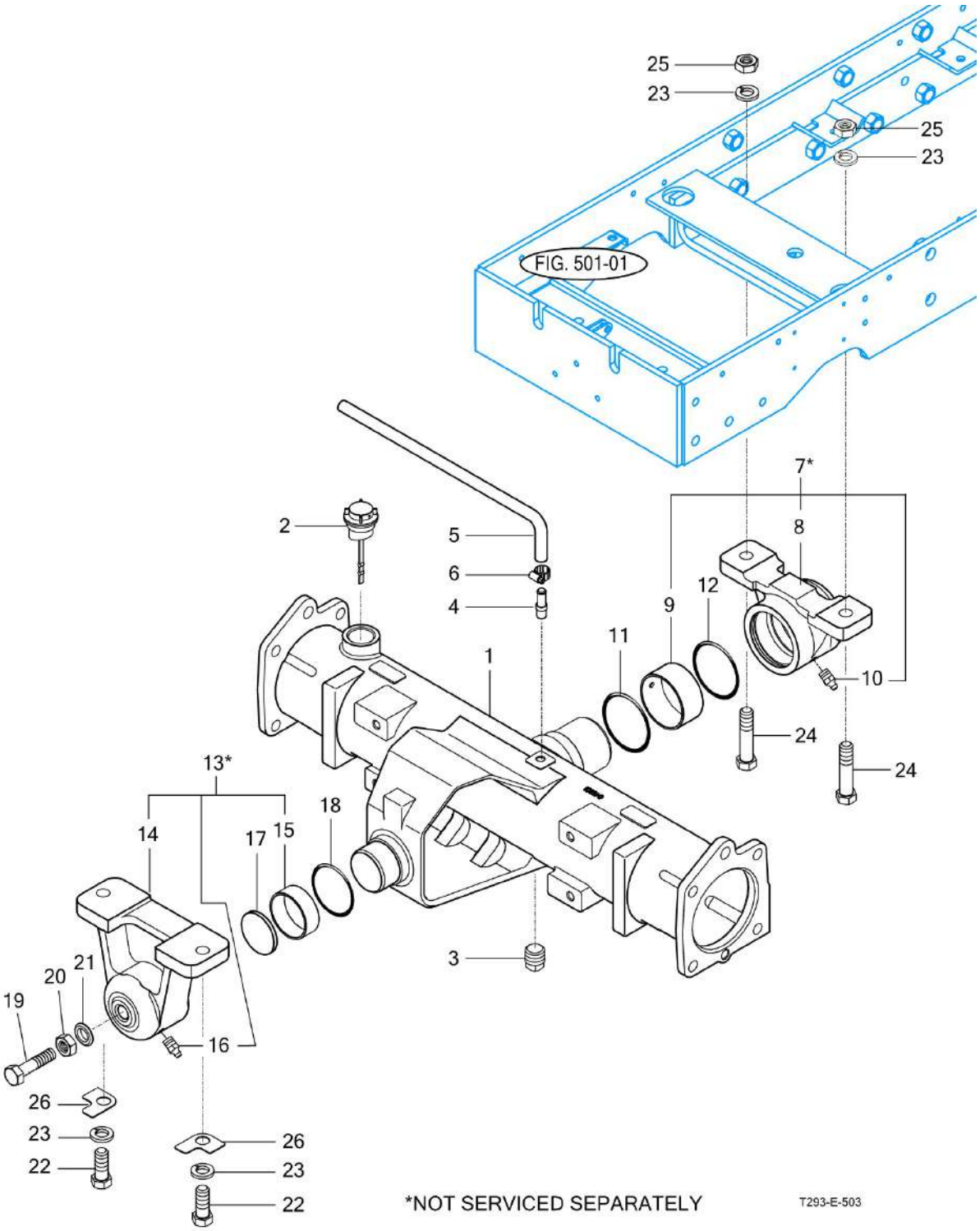

NOTE	

FIG T25NH	FRONT AXLE HOUSING	년/월 Year/Month 2021-12

KEY NO		PART NO	DESCRIPTION	SPEC	QTY	REPAIR	EFFECTIVE DATE	REMARKS
	1	13154120014M	HOUSING , FRONT AXLE		1			
	2	13154122300	CAP ASSY , OIL		1			
	3	V7811600008	PLUG , SQUARE	R1/2	1			
	4	17994360221	CONNECTOR		1			
	5	19021024300	HOSE . 530		1			
	6	17131049210	HOSE CLIP 11		1			
	7	13754122200	METAL ASSY , RR PIVOT		1			
	8	13154122211M	METAL , RR PIVOT		1			
	9	13154122220	BUSH , 60X65X30		1			
	10	V7631500000	NIPPLE , GREASE/B-PT		1			
	11	V7211031065	O-RING , G	G65	1			
	12	V7211031060	O-RING , G	G60	1			
	13	13754122100	METAL ASSY , FR PIVOT		1			
	14	13154122110M	METAL , FR PIVOT		1			
	15	16704332220	BUSH , 50X55X20		1			
	16	V7631500000	NIPPLE , GREASE/B-PT		1			
	17	16704020020	SPACER (F)		1			
	18	V7211031055	O-RING , G	G55	1			
	19	V2004616050	BOLT , HEX	M16X50	1			
	20	V3052600160	NUT , HEX/3	M16	1			
	21	14444120090	WASHER , SEAL		1			
	22	V2013614035	BOLT , HEX	M14X35	2			
	23	V4011600140	WASHER , SPRING	M14	4			
	24	V2013614050	BOLT , HEX	M14X50	2			
	25	V3043600140	NUT , HEX/2	M14	2			
	26	14151060010	WASHER		2			

NOTE	

FIG T25NH	FRONT GEAR CASE (1)	년/월 Year/Month 2021-12

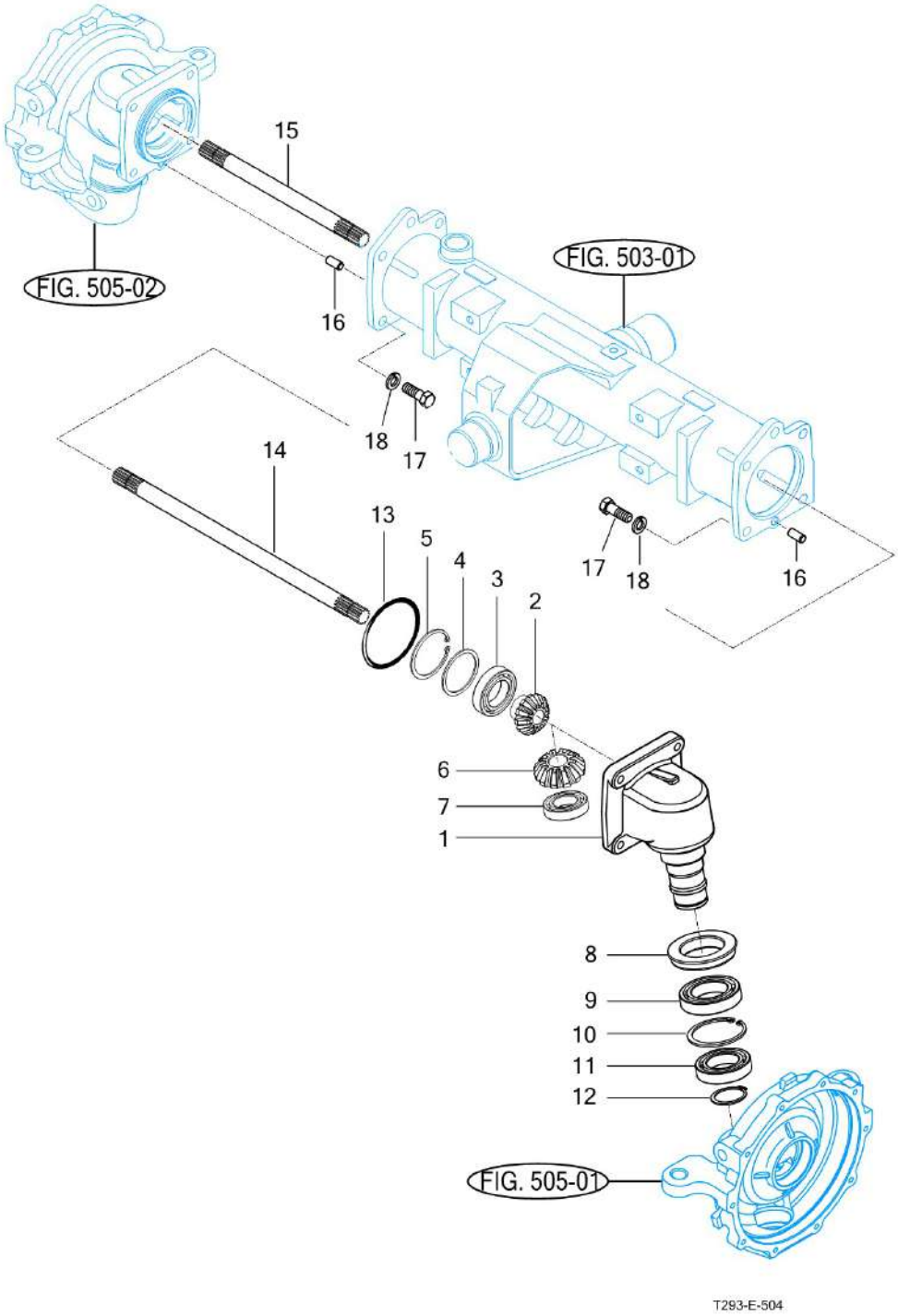

NOTE	

FIG T25NH	FRONT GEAR CASE (1)	년/월 Year/Month 2021-12

KEY NO		PART NO	DESCRIPTION	SPEC	QTY	REPAIR	EFFECTIVE DATE	REMARKS
	1	13154130144M	CASE , FINAL DRIVE A		2			
	2	13154130021	GEAR , BEVEL 11T		2			
	3	V6001106007	BEARING , BALL	6007	2			
	4	13154130030	COLLAR , 53X62X2		2			
	5	V7051400620	C-RING , HOLE	62	2			
	6	13154130041	GEAR , BEVEL 18T		2			
	7	V6001106006	BEARING , BALL	6006	2			
	8	13154130150	SEAL , OIL		2			
	9	V6001106009	BEARING , BALL	6009	2			
	10	V7051400680	C-RING , HOLE	68	2			
	11	V6001106008	BEARING , BALL	6008	2			
	12	V7041400400	C-RING , SHAFT	40	2			
	13	V7231020095	O-RING , S	S95	2			
	14	13154130011	SHAFT , LH		1			
	15	13154130091	SHAFT , RH		1			
	16	V5201010020	PIN , PARALLEL/A	10X20	2			
	17	V2173612035	BOLT , HEX/S	M12X35	8			

NOTE	

FIG T25NH	FRONT GEAR CASE (2)	년/월 Year/Month 2021-12

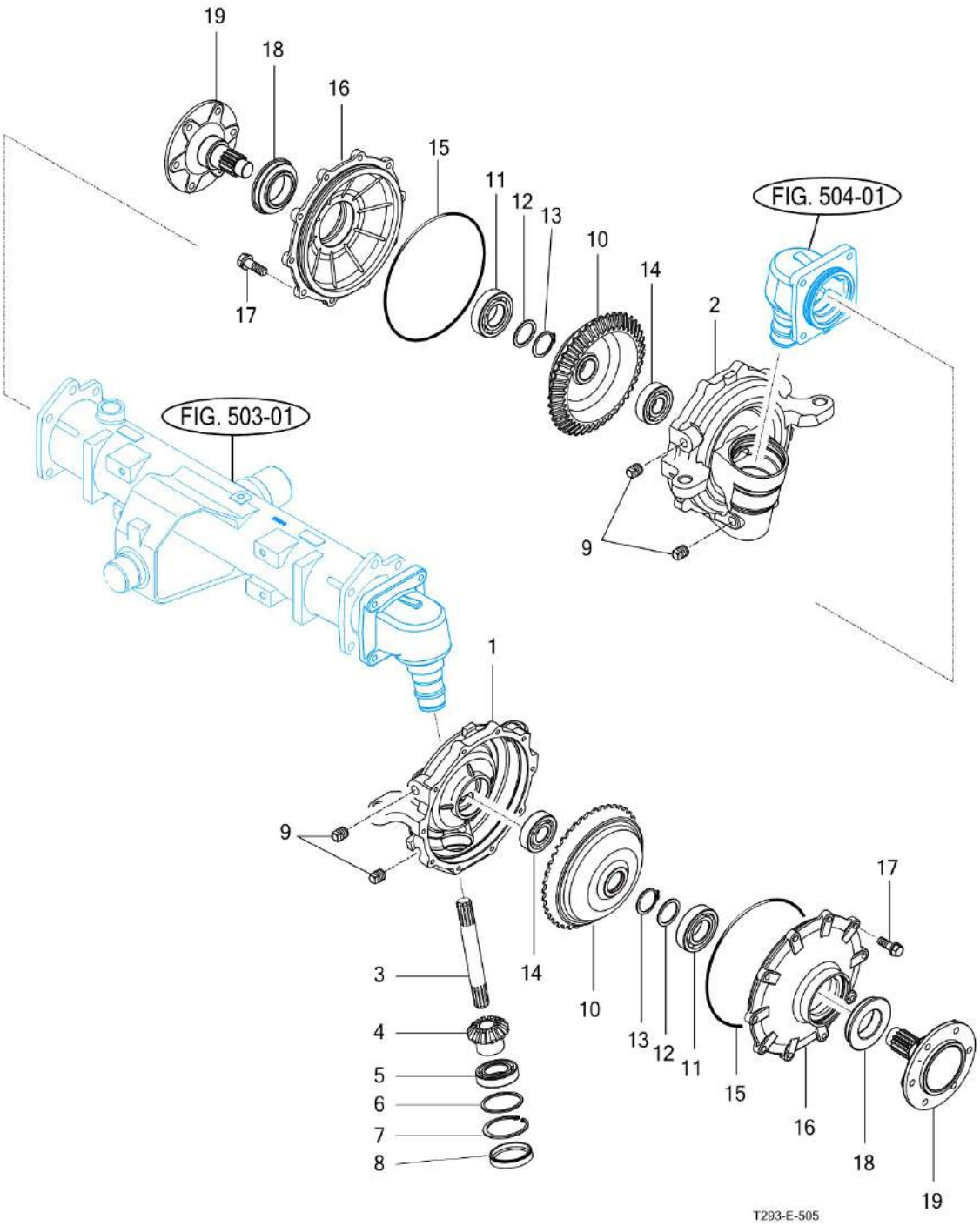

NOTE	

FIG T25NH	FRONT GEAR CASE (2)	년/월 Year/Month 2021-12

KEY NO		PART NO	DESCRIPTION	SPEC	QTY	REPAIR	EFFECTIVE DATE	REMARKS
	1	13154132014M	CASE , LH FINAL DRIVE B		1			
	2	13154132024M	CASE , RH FINAL DRIVE B		1			
	3	13154130051	SHAFT		2			
	4	13154130061	GEAR , BEVEL 9T		2			
	5	V6001106006	BEARING , BALL	6006	2			
	6	13154130070	SHIM		2			
	7	V7051400550	C-RING , HOLE	55	2			
	8	13154130160	CAP , 55		2			
	9	V7811000006	PLUG , SQUARE	R3/8	4			
	10	13154130081	GEAR , BEVEL 44T		2			
	11	V6001106207	BEARING , BALL	6207	2			
	12	13154130110	WASHER , 35X45X2		2			
	13	V7041400350	C-RING , SHAFT	35	2			
	14	V6001106305	BEARING , BALL	6305	2			
	15	13154130170	O-RING , S210		2			
	16	13154130131M	COVER , WHEEL SHAFT		2			
	17	V2173608025	BOLT , HEX/S	M8X25	20			
	18	13153240030	SEAL , SHAFT		2			
	19	13154130122M	SHAFT , FRONT WHEEL		2			

NOTE

6. Hydraulic/3P-Link PART NO. T6

FIG	CYLINDER CASE	112
FIG	LIFT ARM	114
FIG	FLOW CONTROL VALVE	116
FIG	CONTROL VALVE LINKAGE	118
FIG	MAIN CONTROL VALVE	120
FIG	POSITION LEVER LINKAGE	122
FIG	GEAR PUMP	124
FIG	HYDRAULIC HOSE (1)	126
FIG	HYDRAULIC HOSE (2)	128
FIG	PTO VALVE	130
FIG	3-POINT LINKAGE	132
FIG	JOYSTICK LEVER	135
FIG	HITCH & COVER	137
FIG	REMOTE CONTROL VALVE	139

FIG T25NH	CYLINDER CASE	년/월 Year/Month 2021-12

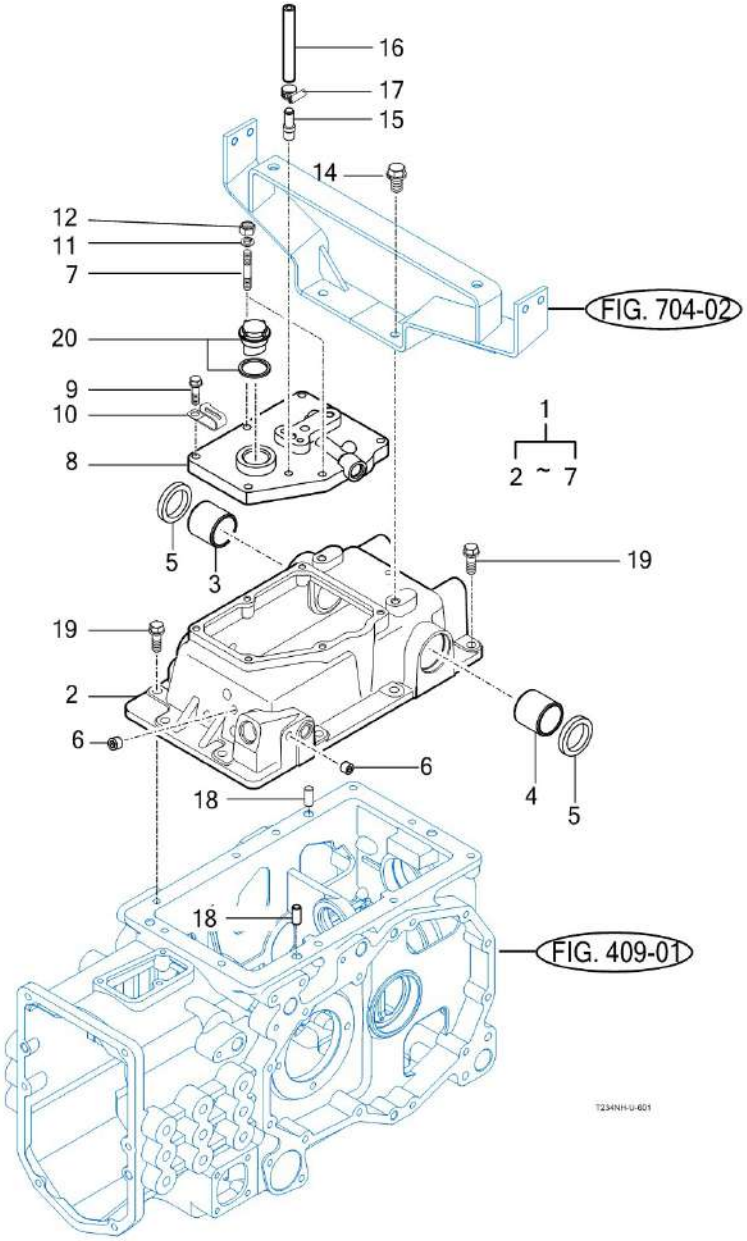

NOTE

FIG T25NH	CYLINDER CASE	년/월 Year/Month 2021-12

KEY NO		PART NO	DESCRIPTION	SPEC	QTY	REPAIR	EFFECTIVE DATE	REMARKS
	1	13755019100	CASE ASSY , CYLINDER		1			
	2	13155010014M	CASE , CYLINDER		1			
	3	13155010030	BUSH , 35X42X40		1			
	4	13155010040	BUSH , 40X46X40		1			
	5	V7441354808	SEAL , OIL/D	D354808	2			
	6	V7801000002	PLUG , HEX-SOCKET	R1/8	2			
	7	V2513408030	BOLT , STUD/2	M8X30	2			
	8	13155010025M	CASE , COVER		1			
	9	V2173608030	BOLT , HEX/S	M8X30	4			
	10	14256210040	CLAMP , 9		1			
	11	V4011600080	WASHER , SPRING	M8	2			
	12	V3042600080	NUT , HEX/2	M8	2			
	14	V2173610020	BOLT , HEX/S	M10X20	2			
	15	17994360221	CONNECTOR		1			
	16	19021024300	HOSE . 530		1			
	17	17131049210	HOSE CLIP 11		1			
	18	V5201010022	PIN , PARALLEL/A	10X22	2			
	19	V2173610035	BOLT , HEX/S	M10X35	10			
	20	15183062000	CAP ASSY , OIL		1			
	20	15184322500	CAP ASSY , OIL		1			

NOTE	

FIG T25NH	LIFT ARM	년/월 Year/Month 2021-12

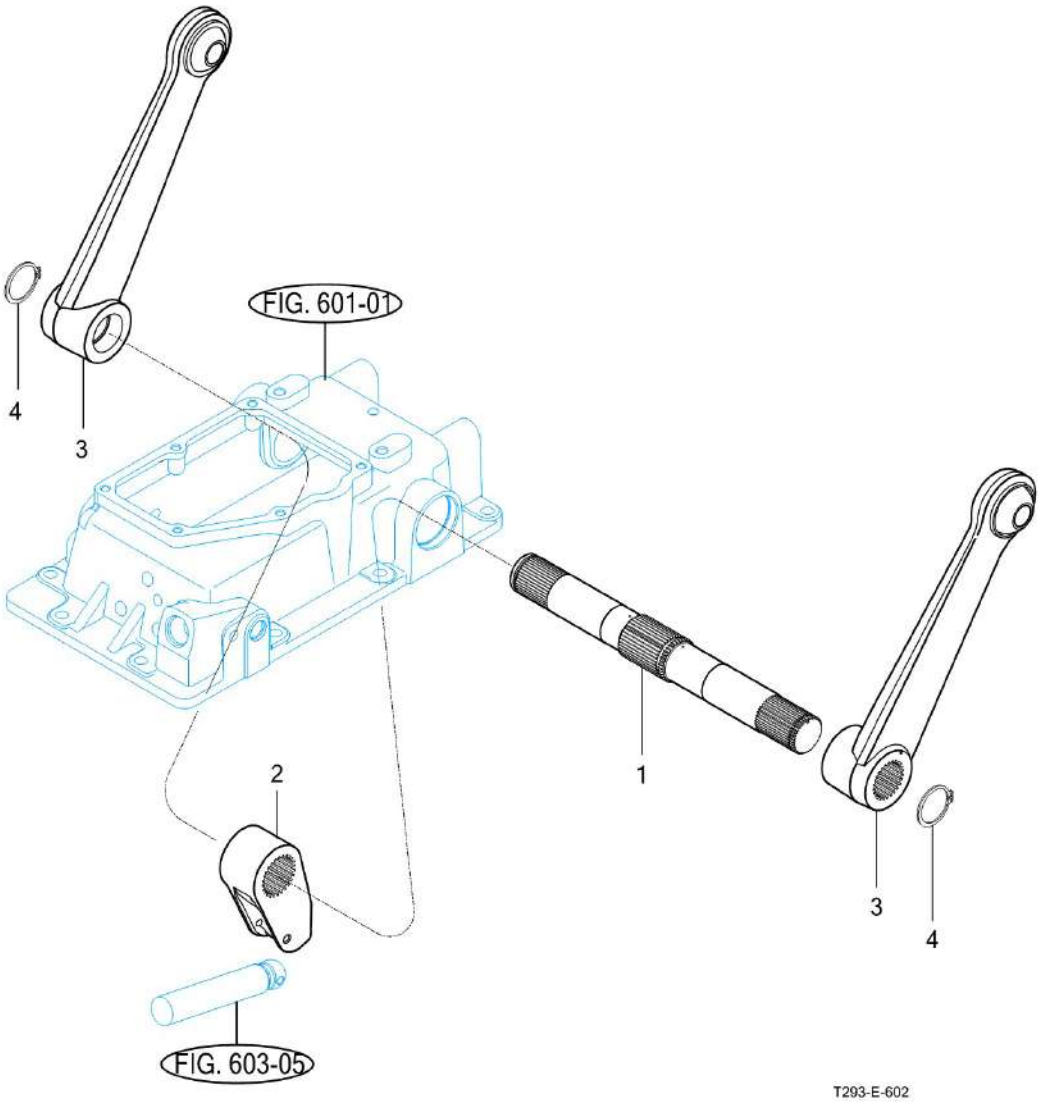

NOTE	

FIG T25NH	LIFT ARM	년/월 Year/Month 2021-12

KEY NO		PART NO	DESCRIPTION	SPEC	QTY	REPAIR	EFFECTIVE DATE	REMARKS
	1	13155020011	SHAFT , LIFT		1			
	2	13155020027M	CRANK , LIFT		1			
	3	13155022101M	ARM COMP , LIFT		2			
	4	V7041400350	C-RING , SHAFT	35	2			

NOTE	

FIG T25NH	FLOW CONTROL VALVE	년/월 Year/Month 2021-12

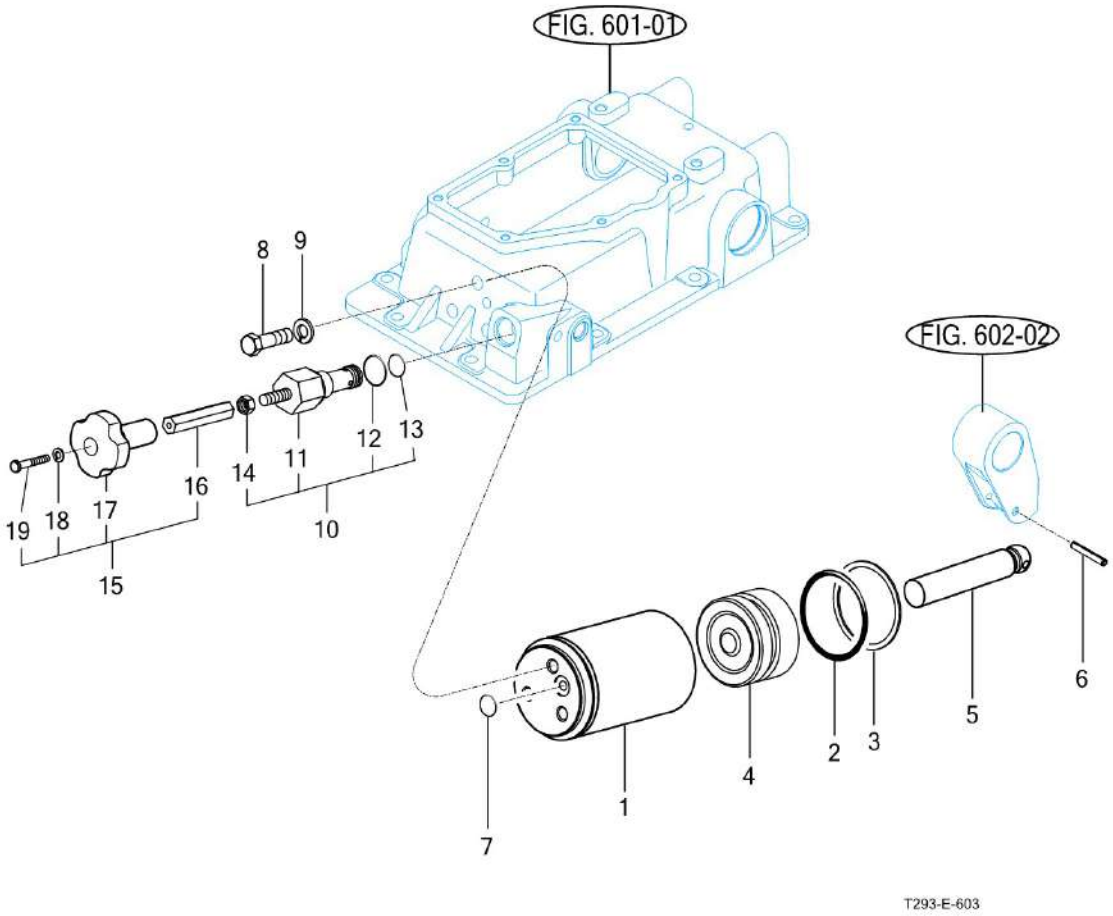

NOTE	

FIG T25NH	FLOW CONTROL VALVE	년/월 Year/Month 2021-12

KEY NO		PART NO	DESCRIPTION	SPEC	QTY	REPAIR	EFFECTIVE DATE	REMARKS
	1	13155032101	CYLINDER COMP		1			
	2	V7201057070	O-RING , P	P70	1			
	3	16705050060	RING		1			
	4	11105030051M	PISTON , HYD		1			
	5	13155030063	ROD , PISTON		1			
	6	V5801406040	PIN , SPRING	6X40	1			
	7	V7201024014	O-RING , P	P14	1			
	8	V2023612045	BOLT , HEX FINE	M12X45	3			
	9	V4011600120	WASHER , SPRING	M12	3			
	10	13155039200	VALVE , SUB FLOW CONTROL		1			
	11	15640040001	VALVE , SUB FLOW CONTROL		1			
	12	V7201124022	O-RING , P	P22	1			
	13	V7201124016	O-RING , P	P16	1			
	14	V3042600100	NUT , HEX/2	M10	1			
	15	16707109900	VALVE ASSY , SLOW RETURN		1			
	16	16705030030	SHAFT , SLOW RETURN(76)		1			
	17	15605070070	KNOB , SLOW RETURN		1			
	18	V4011600060	WASHER , SPRING	M6	1			
	19	V1112606040	SCREW , C/R PAN	M6X40	1			

NOTE	

FIG T25NH	CONTROL VALVE LINKAGE	년/월 Year/Month 2021-12

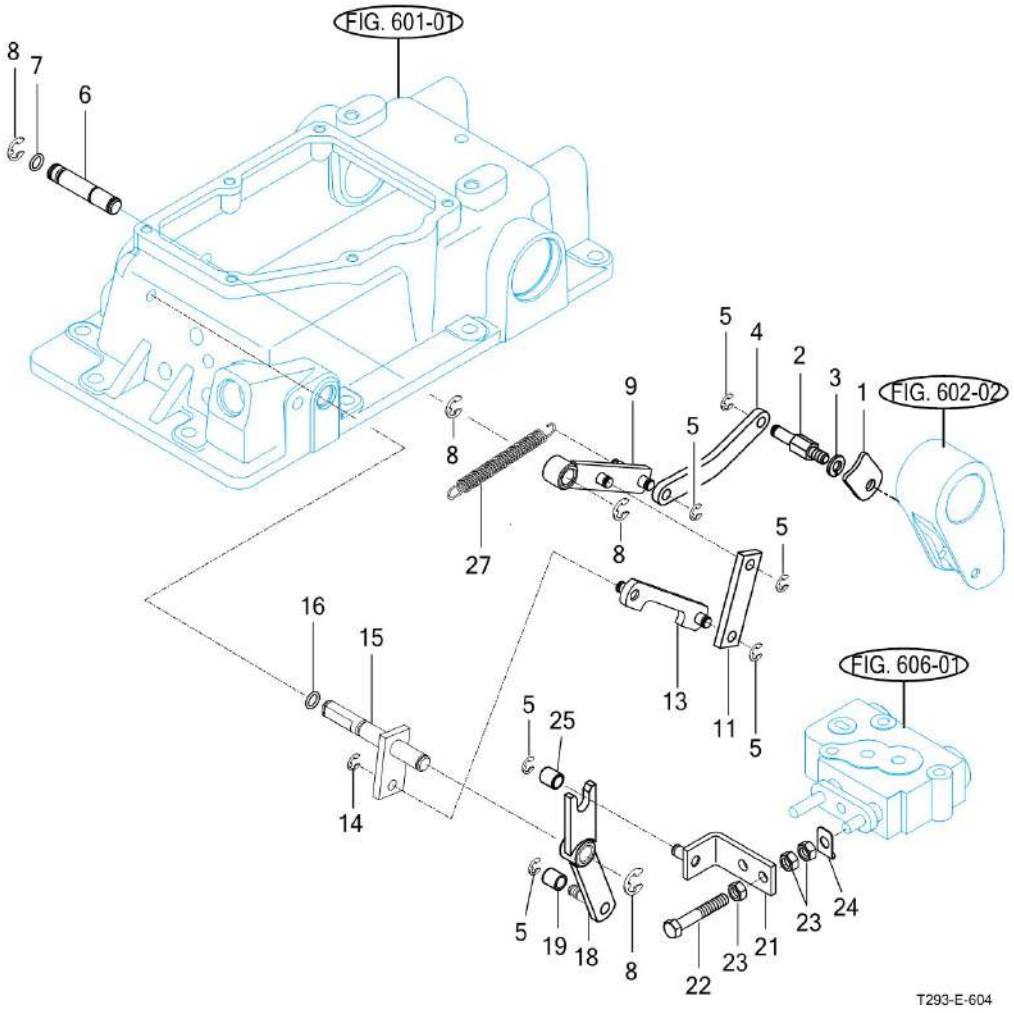

NOTE

FIG T25NH	CONTROL VALVE LINKAGE	년/월 Year/Month 2021-12

KEY NO		PART NO	DESCRIPTION	SPEC	QTY	REPAIR	EFFECTIVE DATE	REMARKS
	1	13155032221	PLATE , FIXED		1			
	2	13155050041	PIN , CRANK		1			
	3	V4011600080	WASHER , SPRING	M8	1			
	4	13155050030	LINK , CRANK		1			
	5	V7081400060	E-RING	6	7			
	6	13155050010	SHAFT , PIVOT		1			
	7	V7201019009	O-RING , P	P9	1			
	8	V7081400090	E-RING	9	4			
	9	13155052401	LINK COMP , PIVOT		1			
	11	13155050021	LINK , CONNECT		1			
	13	13155052300	LINK COMP , B		1			
	14	V7081400060	E-RING		1			
	15	13155052101	SHAFT COMP , POSITION		1			
	16	V7201019009	O-RING , P	P9	1			
	18	13155052200	LINK COMP , POSITION		1			
	19	17995040131	ROLLER		1			
	21	13155042100	CLEVIS COMP		1			
	22	V2013608050	BOLT , HEX	M8X80	1			
	23	V3042600080	NUT , HEX/2	M8	3			
	24	17995040170	WASHER , LOCK		1			
	25	17995040131	ROLLER		1			
	27	13155050051	SPRING		1			

NOTE	

FIG T25NH	MAIN CONTROL VALVE	년/월 Year/Month 2021-12

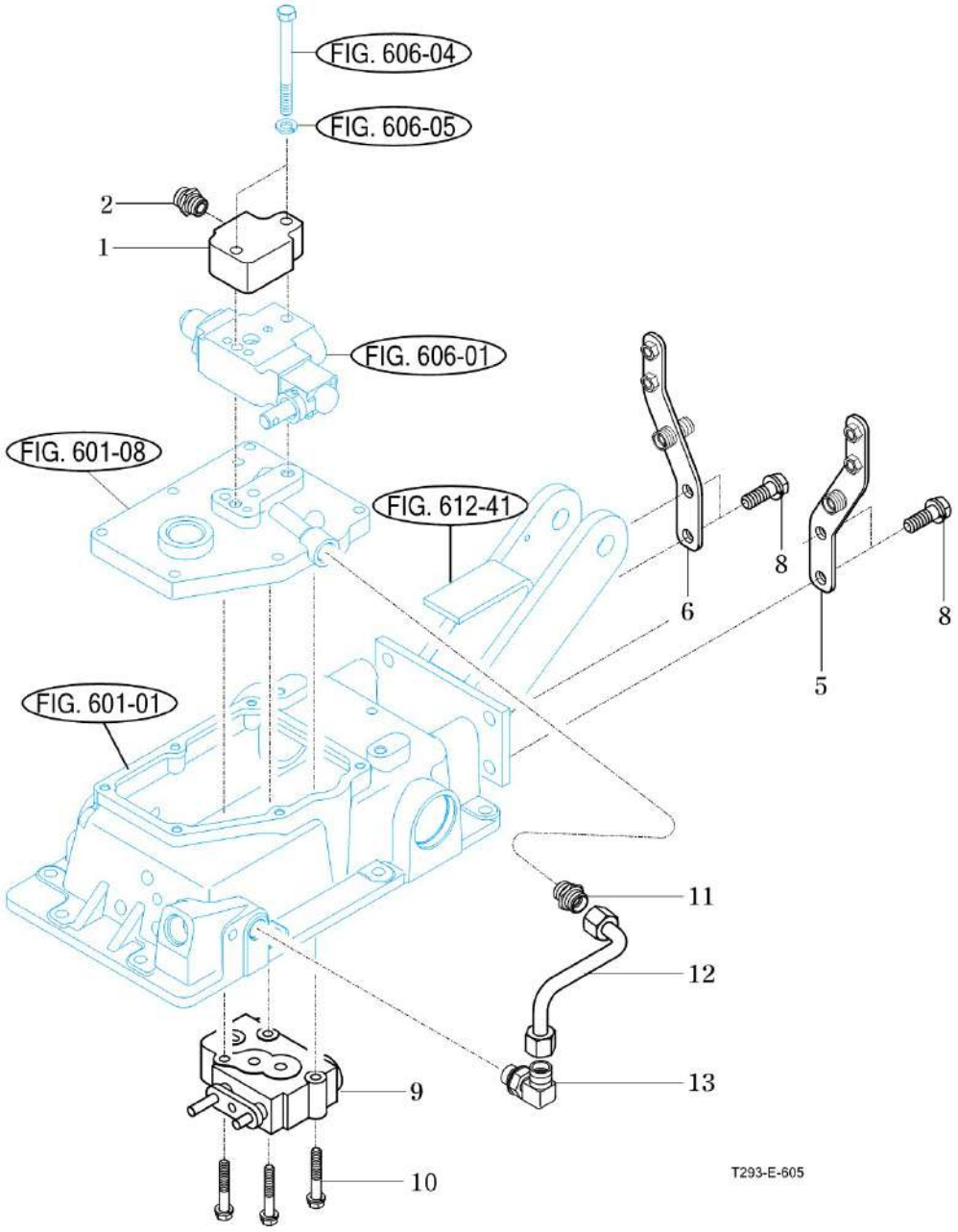

NOTE	

FIG T25NH	MAIN CONTROL VALVE	년/월 Year/Month 2021-12

KEY NO		PART NO	DESCRIPTION	SPEC	QTY	REPAIR	EFFECTIVE DATE	REMARKS
	1	17995080970	COVER , EXTERIOR HYD		1			
	2	16994080072	UNION , SHORT		1			
	3	V2013610050	BOLT , HEX	M10X50	2			
	4	V4011600100	WASHER , SPRING	M10	2			
	5	13155122302	STAY COMP , FUELTANK LH		1			
	6	13155122402	STAY COMP , FUELTANK RH		1			
	8	V2173612035	BOLT , HEX/S	M12X35	4			
	9	17995050100	VALVE ASSY , MAIN CONTROL		1			
	10	V2173608045	BOLT , HEX/S	M8X45	3			
	11	16705060060	UNION		1			
	12	13155012102	PIPE COMP , CYLINDER		1			
	13	14725100100	ELBOW , PF3/8 M18		1			

NOTE	

FIG T25NH	POSITION LEVER LINKAGE	년/월 Year/Month 2021-12

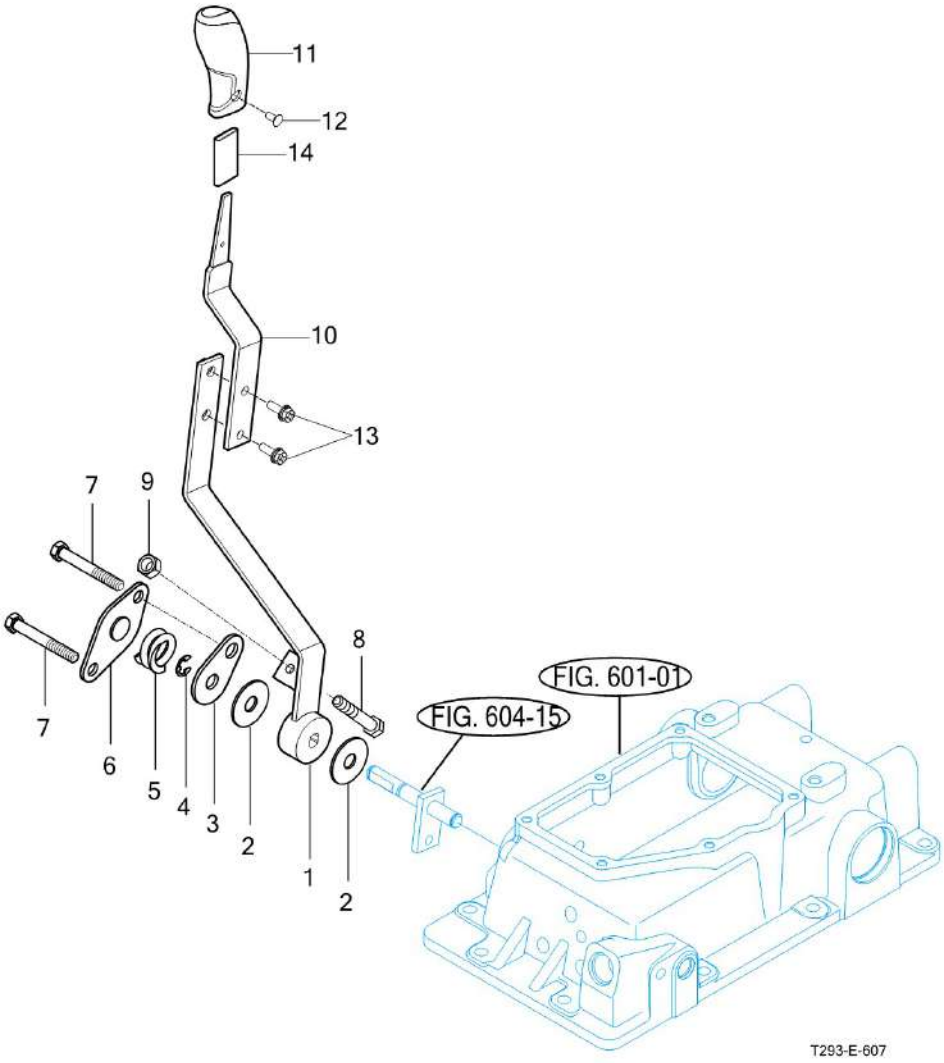

NOTE	

FIG T25NH	POSITION LEVER LINKAGE	년/월 Year/Month 2021-12

KEY NO		PART NO	DESCRIPTION	SPEC	QTY	REPAIR	EFFECTIVE DATE	REMARKS
	1	11815062100	LEVER COMP , POSITION		1			
	2	13835070210	PLATE , FRICTION		2			
	3	17995070200	PLATE , A		1			
	4	V7081400090	E-RING	9	1			
	5	17995070180	SPRING		1			
	6	17995070170	PLATE , D		1			
	7	V2013610060	BOLT , HEX	M10X60	2			
	8	V2013608050	BOLT , HEX	M8X50	1			
	9	V3042600080	NUT , HEX/2	M8	1			
	10	11815062110	POSITION LEVER (UPR)		1			
	11	11817513500	GRIP(POSITION)		1			
	12	V1122605012	SCREW , C/R FLAT		1			
	13	V2323606020	BOLT , C/R HEX/SP		2			
	14	11815060010	TUBE , 50		1			

NOTE	

FIG T25NH	GEAR PUMP	년/월 Year/Month 2021-12

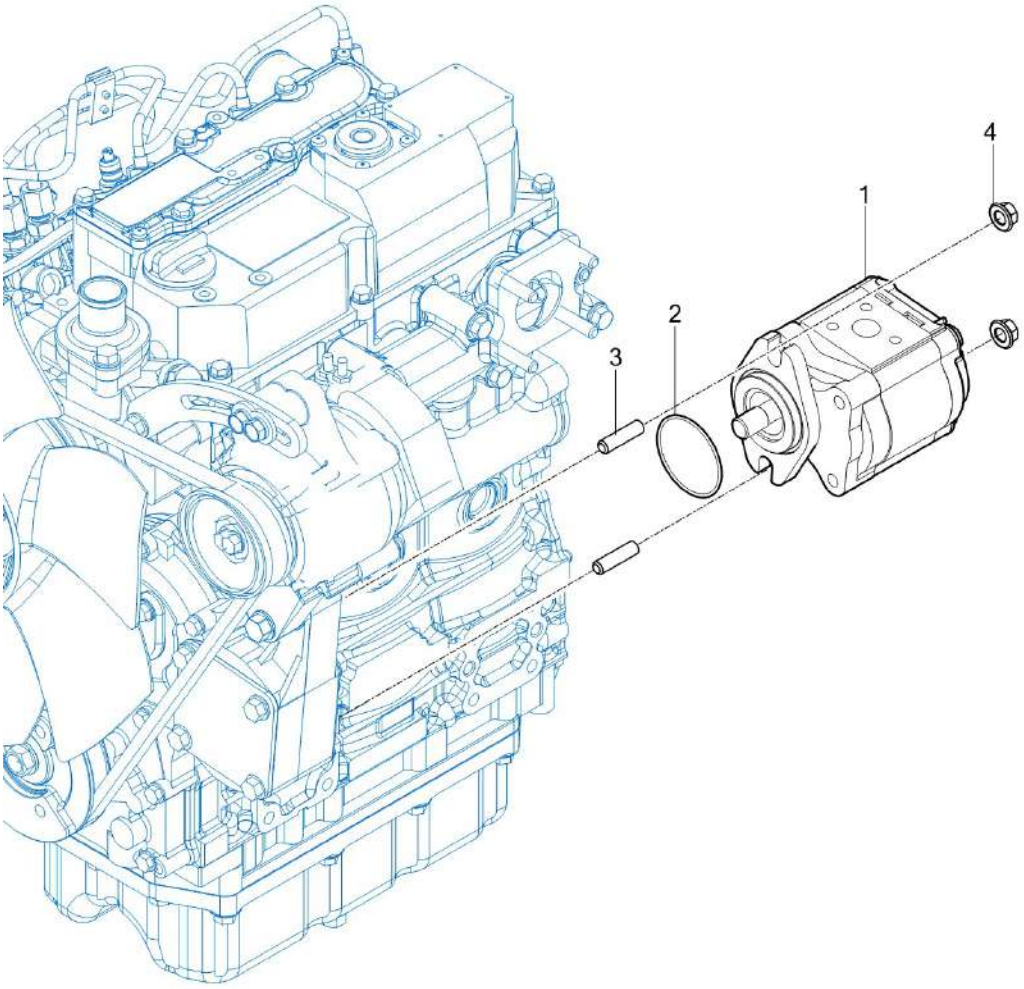

NOTE	

FIG T25NH	GEAR PUMP	년/월 Year/Month 2021-12

KEY NO		PART NO	DESCRIPTION	SPEC	QTY	REPAIR	EFFECTIVE DATE	REMARKS
	1	11115182200	GEAR PUMP ASSY , 11cc		1			
	2	V7231020055	O-RING , S		1			
	3	V2513408020	BOLT , STUD/2		2			
	4	V3802600080	NUT , HEX FLANGE		2			

NOTE	

FIG T25NH	HYDRAULIC HOSE (1)	년/월 Year/Month 2021-12

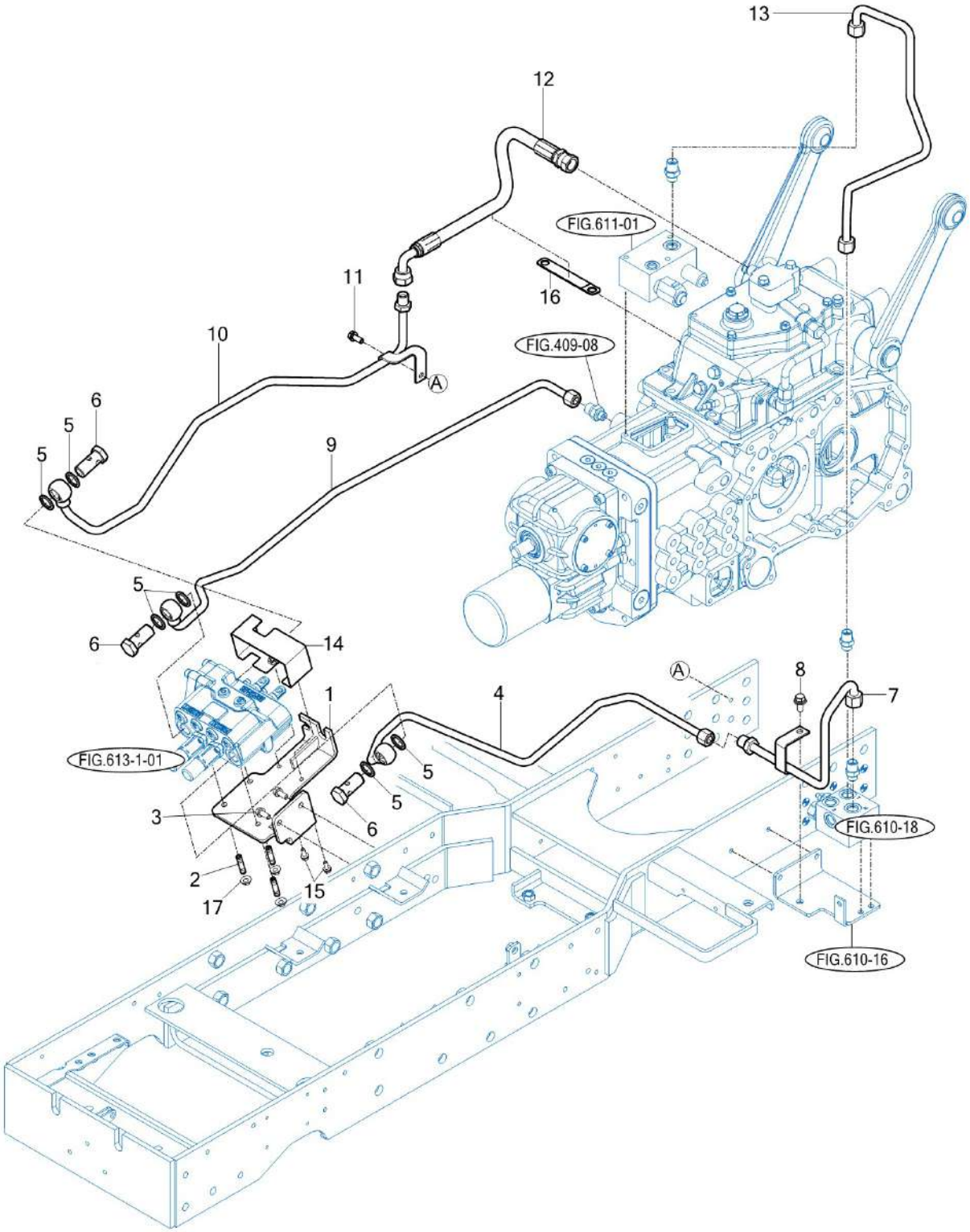

NOTE

FIG T25NH	HYDRAULIC HOSE (1)	년/월 Year/Month 2021-12

KEY NO		PART NO	DESCRIPTION	SPEC	QTY	REPAIR	EFFECTIVE DATE	REMARKS
	1	11815256100GB	BRACKET COMP , LOADER VV		1			
	2	V2513408025	BOLT , STUD/2	M8X30	3			
	2	V2173608025	BOLT , HEX/S		3			
	3	V2173608020	BOLT , HEX/S	M8X20	2			
	4	11815253100GB	PIPE COMP , LOADER P		1			
	5	19557753010	BONDED SEAL , PF1/2		6			
	6	13875410082	BOLT , EYE JOINT(PF1/2)		3			
	7	11815353200GB	PIPE COMP , MAIN RR		1			
	8	V2183608020	BOLT , HEX/SP		1			
	9	11815253200	PIPE COMP , LOADER T		1			
	10	11815253300GB	PIPE COMP , LOADER C FR		1			
	11	V2173608020	BOLT , HEX/S		1			
	12	11815204300	HOSE ASSY , HYD 520		1			
	13	11815252500GB	PIPE COMP , DRAIN		1			
	14	11815257100GB	COVER COMP , LOADER VV		1			
	15	V2123606020	BOLT , HEX /SP		2			
	16	36527040020	CLAMP , 20X180		1			
	17	V3802600080	NUT , HEX FLANGE		3			

NOTE	

FIG T25NH	HYDRAULIC HOSE (2)	년/월 Year/Month 2021-12

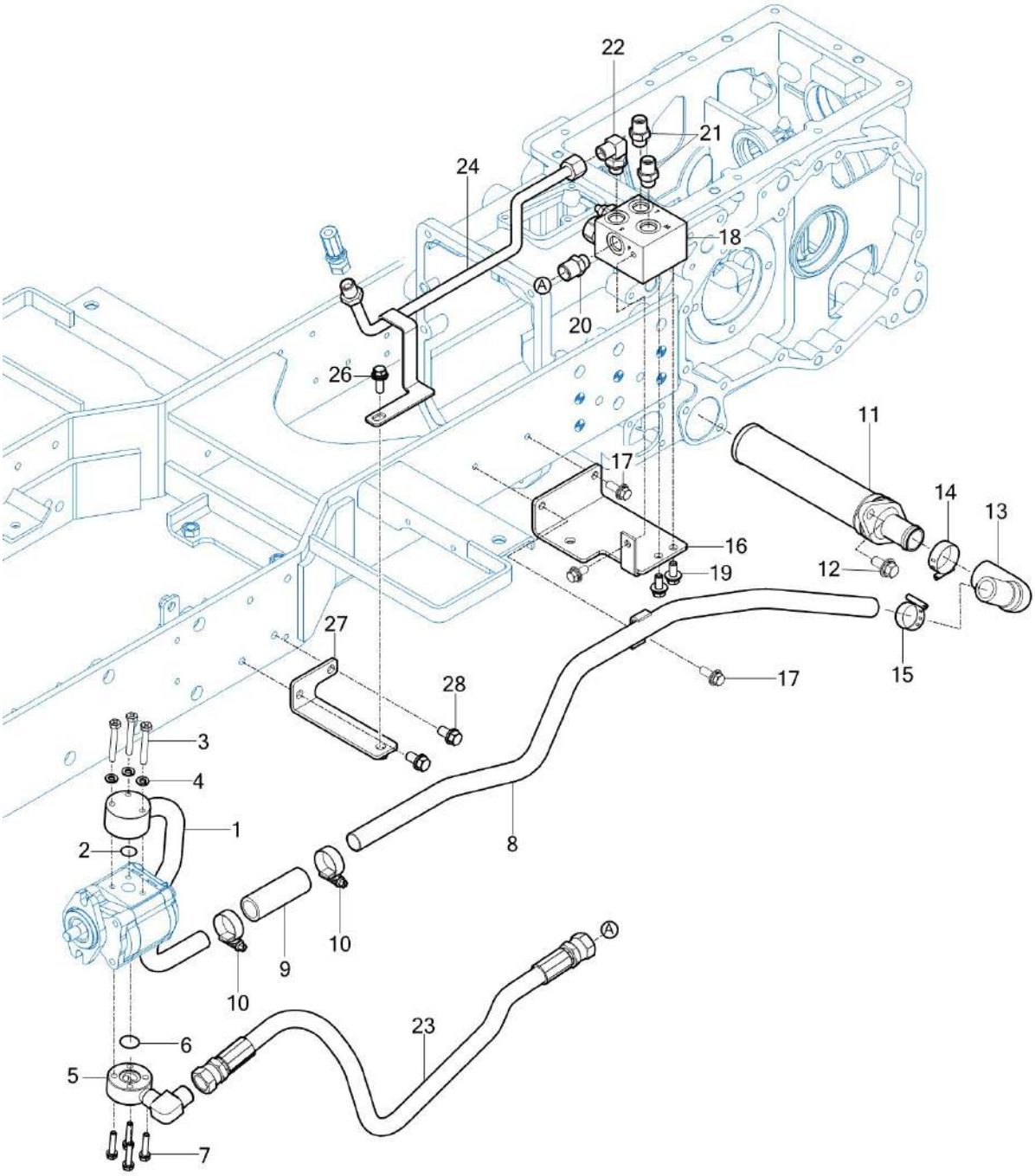

NOTE	

FIG T25NH	HYDRAULIC HOSE (2)	년/월 Year/Month 2021-12

KEY NO		PART NO	DESCRIPTION	SPEC	QTY	REPAIR	EFFECTIVE DATE	REMARKS
	1	11815303200GB	PIPE COMP , SUCTION FR		1			
	2	V7201024020	O-RING , P		1			
	3	V2053606045	BOLT , HEX C/R		3			
	4	V4011600060	WASHER , SPRING		3			
	5	11815353101GB	FLANGE COMP , MAIN FR		1			
	6	V7201024020	O-RING , P		1			
	7	V2113606030	BOLT , HEX /S		4			
	8	11815303100GB	PIPE COMP , SUCTION RR		1			
	9	13155103730	HOSE(21X29X80)		1			
	10	18027090320	BAND CLAMP 32 EMBO TYPE		2			
	11	16705105000	FILTER ASSY , SUCTION		1			
	12	V2183610025	BOLT , HEX/SP		2			
	13	13155150021	HOSE , SUCTION		1			
	14	18027090400	BAND CLAMP 40 EMBO TYPE		1			
	15	18027090320	BAND CLAMP 32 EMBO TYPE		1			
	16	11815203200GB	BRACKET COMP , DIVIDER VV		1			
	17	V2183608025	BOLT , HEX/SP		2			
	18	11815203100	DIVIDER VALVE		1			
	19	V2183608020	BOLT , HEX/SP		3			
	20	17995161130	UNION , PF3/8 PF1/2		1			
	21	16995304000	UNION , O-RING		2			
	22	14725100100	ELBOW , PF3/8 M18		1			
	23	11815204201	HOSE ASSY , HYD 680		1			
	24	11814073100GB	PIPE COMP , STEERING P		1			
	26	V2183608020	BOLT , HEX/SP		1			
	27	11815902201GB	BRACKET COMP , FIX PIPE		1			
	28	V2173610020	BOLT , HEX/S		2			

NOTE	

FIG T25NH	PTO VALVE	년/월 Year/Month 2021-12

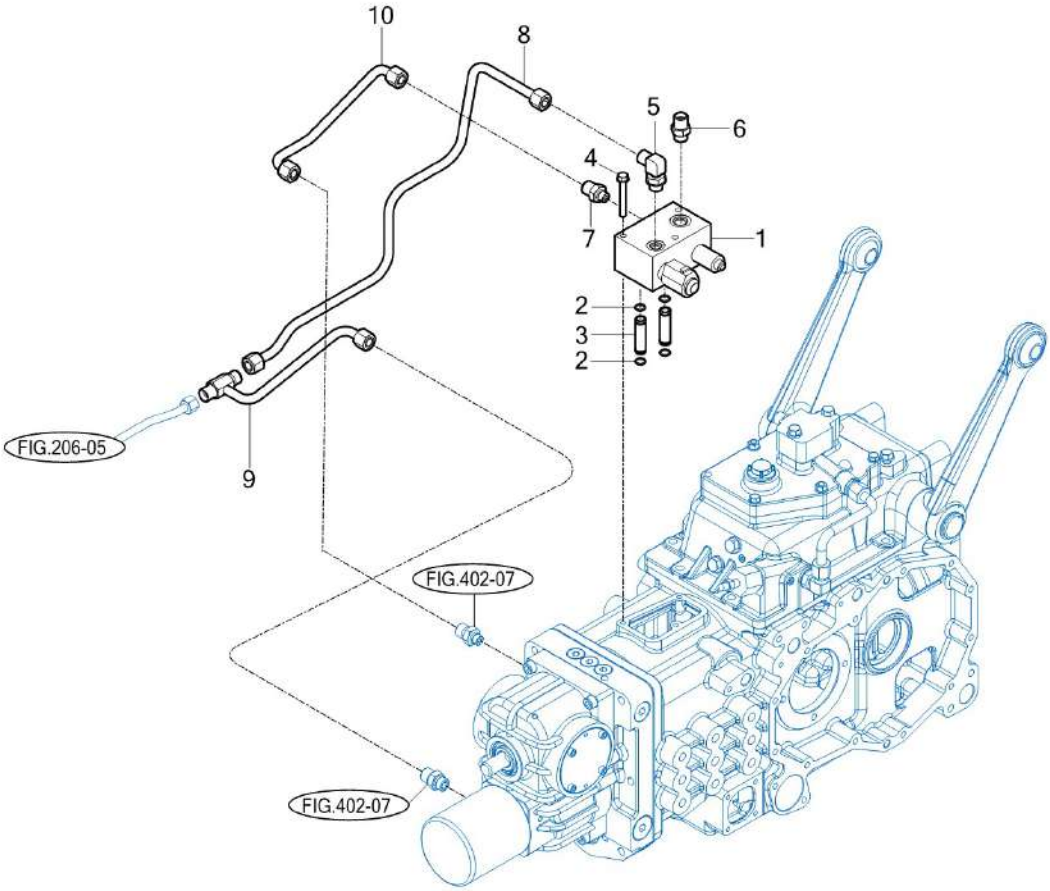

NOTE	

FIG T25NH	PTO VALVE	년/월 Year/Month 2021-12

KEY NO		PART NO	DESCRIPTION	SPEC	QTY	REPAIR	EFFECTIVE DATE	REMARKS
	1	11815204100	VALVE ASSY , PTO		1			
	2	V7231015012	O-RING , S		4			
	3	13155104413	PIPE , PTO		2			
	4	V2173608070	BOLT , HEX/S		3			
	5	14725100100	ELBOW , PF3/8 M18		1			
	6	16995304000	UNION , O-RING		2			
	8	13155102303	PIPE COMP , PTO		1			
	9	13155102504	PIPE COMP , HST		1			
	10	13155102901	PIPE COMP , DRAIN		1			

NOTE	

FIG T25NH	3-POINT LINKAGE	년/월 Year/Month 2021-12

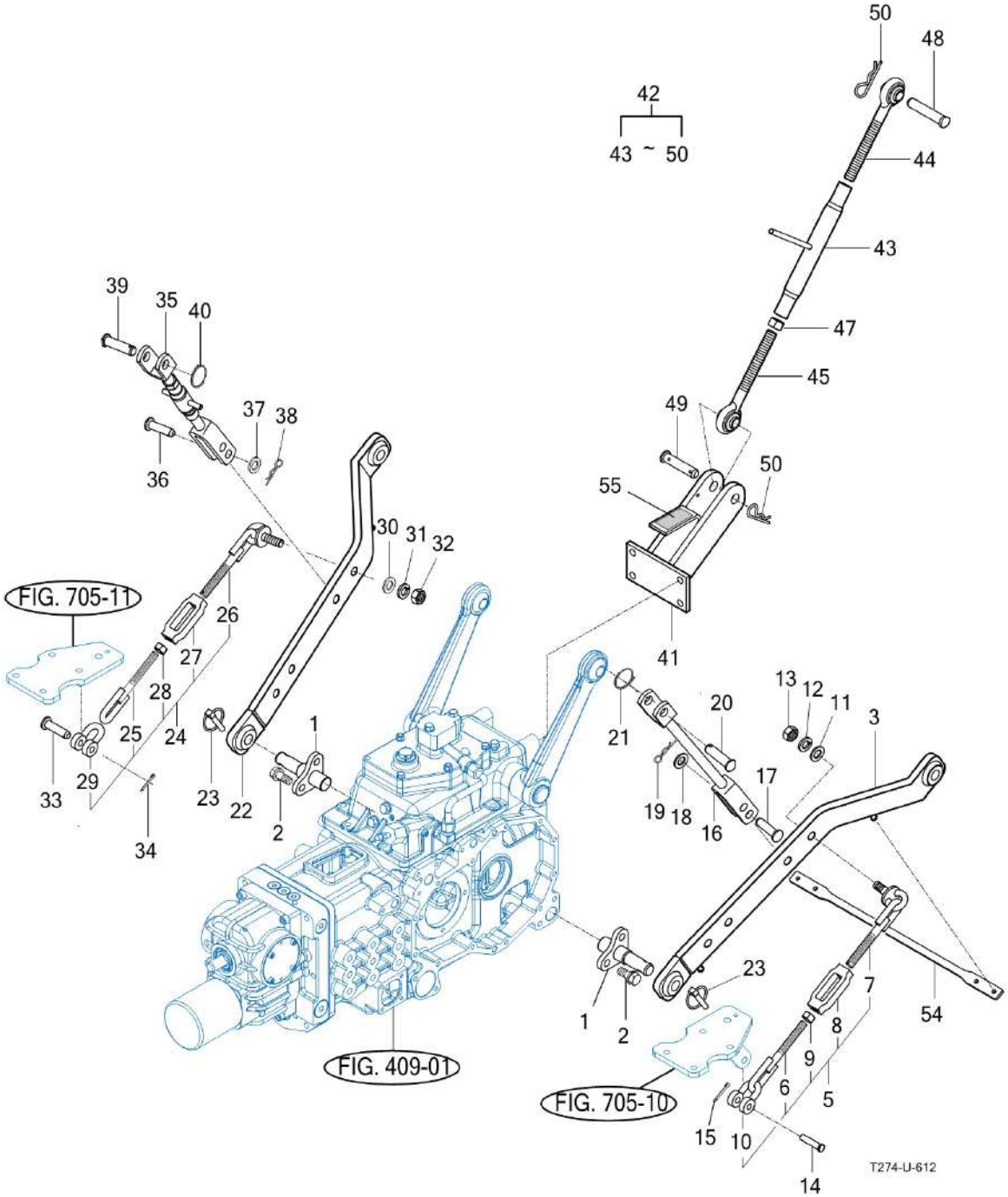

NOTE

FIG T25NH	3-POINT LINKAGE	년/월 Year/Month 2021-12

KEY NO		PART NO	DESCRIPTION	SPEC	QTY	REPAIR	EFFECTIVE DATE	REMARKS
	1	13155205100	PIN COMP, 115		2			
	2	V2173612030	BOLT , HEX/S	M12X30	4			
	3	13155202202	LOWER LINK COMP , LH		1			
	5	13155202501	CHAIN ASSY , CHECK		1			
	6	14585142600	CHAIN COMP , RH CHECK		1			
	7	14585142700	CHAIN COMP , LH CHECK		1			
	8	13155202511	TURNBUCKLE		1			
	9	V3012600140	NUT , HEX/2	M14	1			
	10	14585142520	SHACKLE , CHECK CHAIN		1			
	11	V4111600160	WASHER , PLAIN	M16	1			
	12	V4011600160	WASHER , SPRING	M16	1			
	13	V3313600160	NUT , HEX FINE/2	M16	1			
	14	79636110030	PIN , 12X48		1			
	15	V5001930020	PIN , SPLIT	3X20	1			
	15	V5001930020	PIN , SPLIT		1			
	16	13155202401	LIFT ROD COMP , LH		1			
	17	79636130050	PIN , 16X60		1			
	18	V4111600160	WASHER , PLAIN	M16	1			
	19	13059310030	PIN		1			
	20	12505243500	PIN		1			
	21	12505240060	Spring		1			
	22	13155203102	LOWER LINK COMP , RH		1			
	23	14215020020	PIN , LINK		2			
	24	13155202501	CHAIN ASSY , CHECK		1			
	25	14585142600	CHAIN COMP , RH CHECK		1			
	26	14585142700	CHAIN COMP , LH CHECK		1			
	27	13155202511	TURNBUCKLE		1			
	28	V3012600140	NUT , HEX/2	M14	1			
	29	14585142520	SHACKLE , CHECK CHAIN		1			
	30	V4111600160	WASHER , PLAIN	M16	1			
	31	V4011600160	WASHER , SPRING	M16	1			
	32	V3313600160	NUT , HEX FINE/2	M16	1			
	33	79636110030	PIN , 12X48		1			
	34	V5001930020	PIN , SPLIT	3X20	1			
	34	V5001930020	PIN , SPLIT		1			
	35	13155203201	LIFT ROD ASSY , RH		1			
	36	79636130050	PIN , 16X60		1			
	37	V4111600160	WASHER , PLAIN	M16	1			
	38	13059310030	PIN		1			
	39	12505243500	PIN		1			
	40	12505240060	Spring		1			
	41	13155204104	BRACKET COMP, TOP LINK		1			
	42	13155206003	TOP LINK ASSY		1			
	43	13155206111	TURN BUCKLE		1			
	44	13155206121	JOINT , LH		1			

NOTE

FIG T25NH	3-POINT LINKAGE	년/월 Year/Month 2021-12

KEY NO		PART NO	DESCRIPTION	SPEC	QTY	REPAIR	EFFECTIVE DATE	REMARKS
	45	13155206131	JOINT , RH		1			
	47	V3042600200	NUT , HEX/2	M20	1			
	48	15645220020	PIN , 19X95		1			
	49	15645220011	PIN , 19X86		1			
	50	14445140051	PIN , 19		3			
	54	15605250030	BAND , 470		1			
	55	13151112011	INSULATOR , 40X70		1			

NOTE	

FIG T25NH	JOYSTICK LEVER	년/월 Year/Month 2021-12

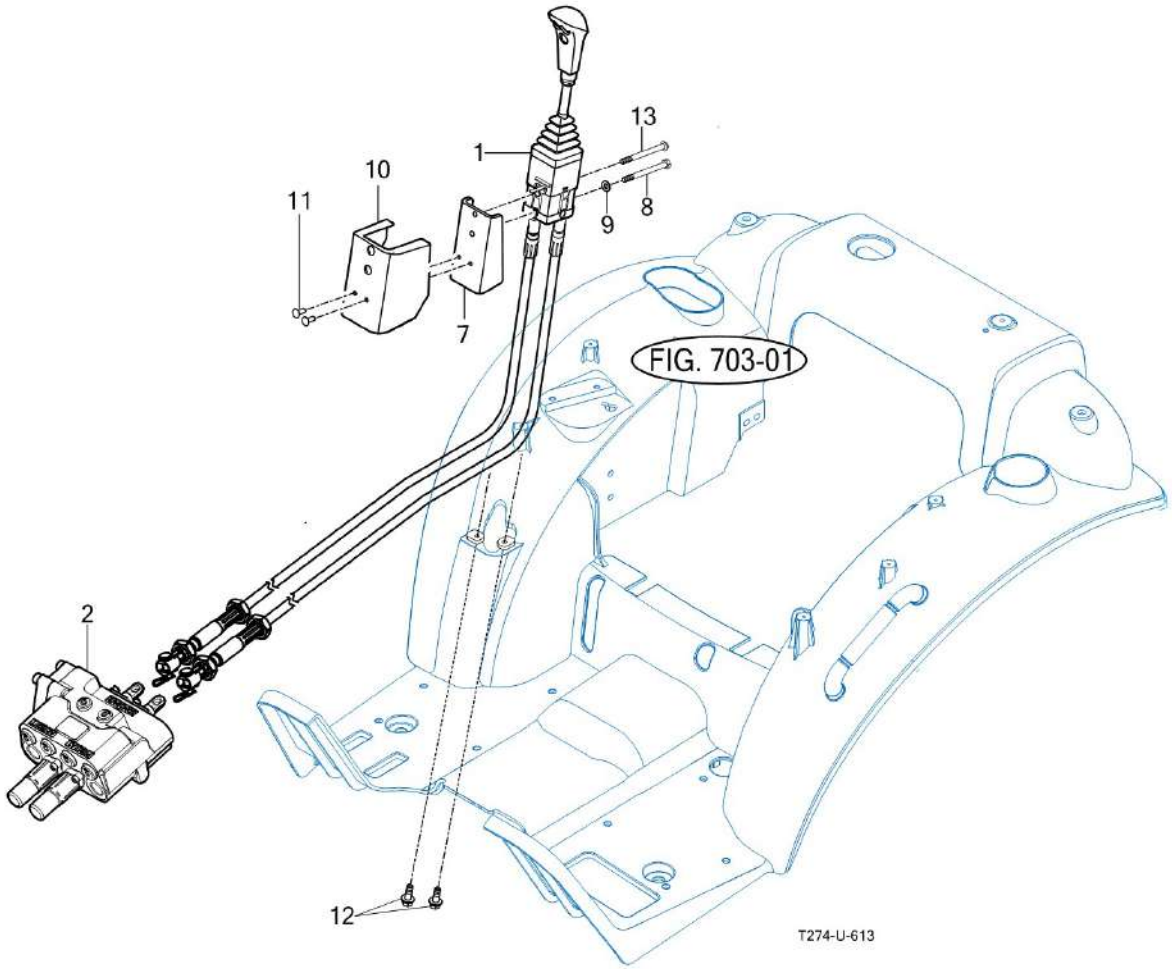

NOTE	

FIG T25NH	JOYSTICK LEVER	년/월 Year/Month 2021-12

KEY NO		PART NO	DESCRIPTION	SPEC	QTY	REPAIR	EFFECTIVE DATE	REMARKS
	1	11815252200	LEVER SUB , JOYSTICK		1			
	2	11815252000	VALVE SUB , LOADER		1			
	7	13156252205	PLATE COMP , JOYSTICK		1			
	8	V2173608075	BOLT , HEX/S	M8X75	2			
	8	V2173608075	BOLT , HEX/S		1			
	9	V4111600080	WASHER , PLAIN	M8	2			
	9	V4111600080	WASHER , PLAIN		1			
	10	11816082130NG	COVER, JOYSTICK		1			
	11	V1122806016	SCREW , C/R FLAT	M6X16	2			
	12	V2183608025	BOLT , HEX/SP	M8X25	2			
	13	11816250080	SCREW , HEX BOTTON M8X70		1			

NOTE	

FIG T25NH	HITCH & COVER	년/월 Year/Month 2021-12

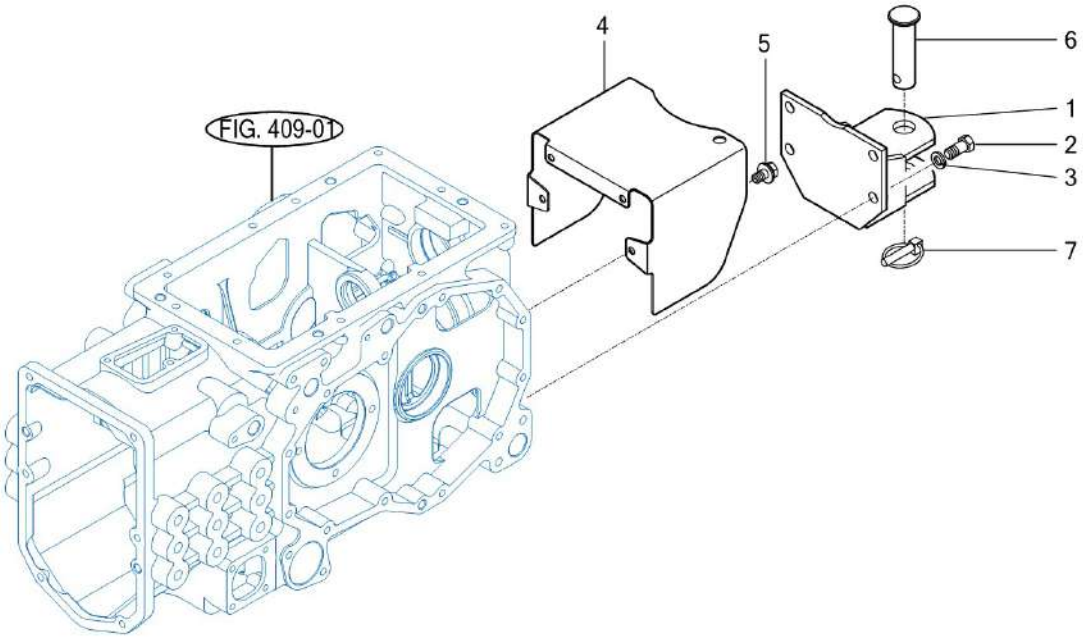

NOTE	

FIG T25NH	HITCH & COVER	년/월 Year/Month 2021-12

KEY NO		PART NO	DESCRIPTION	SPEC	QTY	REPAIR	EFFECTIVE DATE	REMARKS
	1	13155212100	HITCH COMP, TRAILER		1			
	2	V2013614030	BOLT , HEX	M14X30	4			
	3	V4011600140	WASHER , SPRING	M14	4			
	4	13155201011	SHIELD, PTO		1			
	5	V2183608016	BOLT , HEX/SP	M8X16	4			
	6	14882472502	PIN ASSY , TRAILER		1			
	7	14215020020	PIN , LINK		1			

NOTE	

FIG T25NH	REMOTE CONTROL VALVE	년/월 Year/Month 2021-12

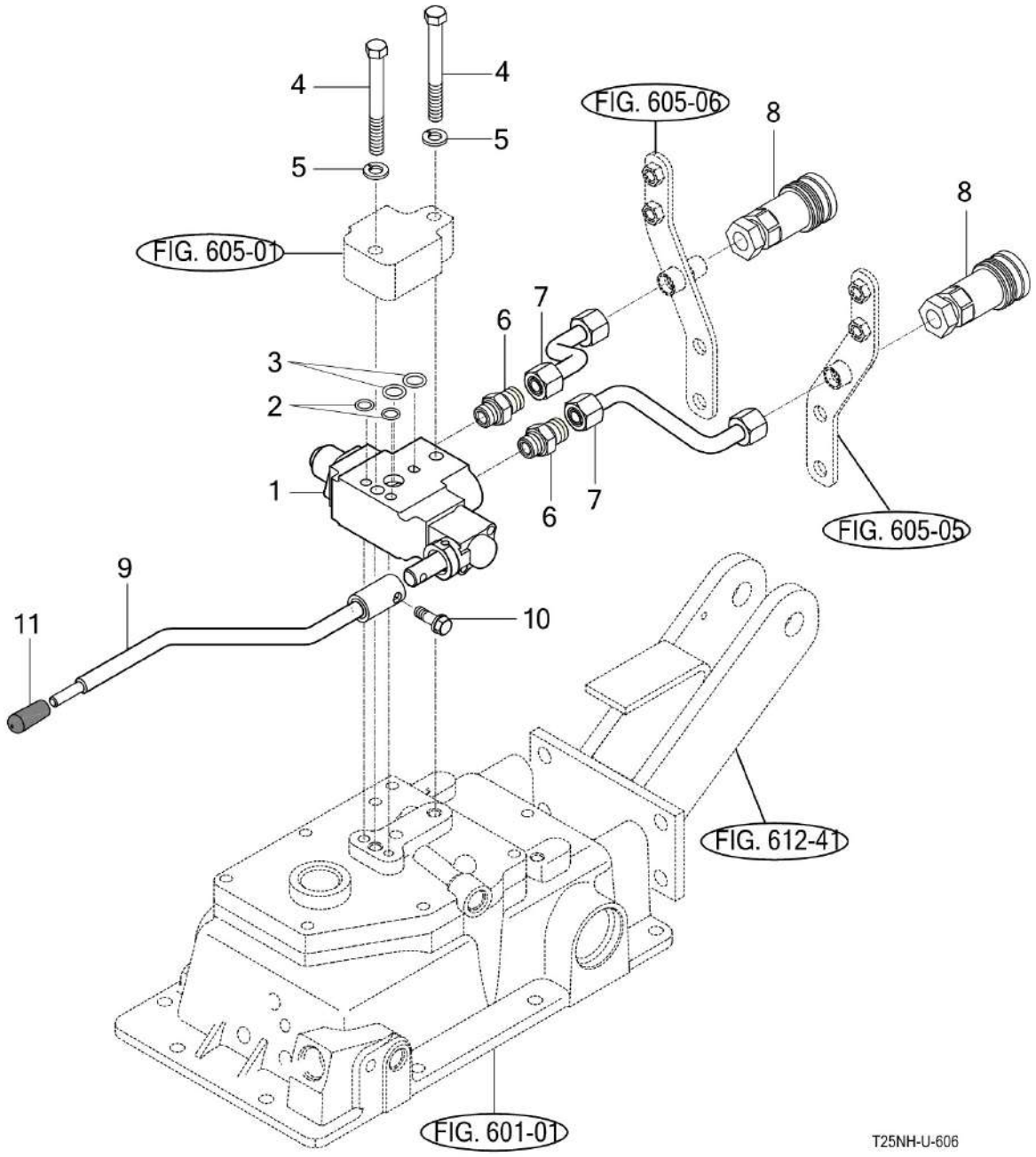

NOTE

FIG T25NH	REMOTE CONTROL VALVE	년/월 Year/Month 2021-12

KEY NO		PART NO	DESCRIPTION	SPEC	QTY	REPAIR	EFFECTIVE DATE	REMARKS
	1	17685080950	VALVE , AUX EXTERIOR DETENT		1			
	2	V7201019010	O-RING , P	P10	2			
	3	V7201024016	O-RING , P	P16	2			
	4	V2013610090	BOLT , HEX	M10X90	2			
	5	V4011600100	WASHER , SPRING	M10	2			
	6	16995304000	UNION , O-RING		2			
	7	13155122203	PIPE COMP ,EXTERIOR HYD		2			
	8	12105301001	COUPLING A		2			
	9	13155122103	LEVER COMP , AUX VALVE		1			
	10	V2173608025	BOLT , HEX/S	M8X25	1			
	11	21615250020	GRIP , LEVER/RED		1			

NOTE	

7. Sheet Metal & Cabin PART NO. T7

FIG	BONNET	142
FIG	DASH PANEL	144
FIG	FLOOR	146
FIG	SEAT	149
FIG	ROPS	151
FIG	CAB FRAME & DOOR(OPTION)	153
FIG	FRONT GLASS(OPTION)	155
FIG	SIDE & REAR GLASS(OPTION)	157
FIG	ROOF(OPTION)	159
FIG	HEATER(OPTION)	161
FIG	INTERIOR PART(OPTION)	163
FIG	SEAL(OPTION)	165
FIG	FRONT & REAR MOUNTING(OPTION)	167

FIG T25NH	BONNET	년/월 Year/Month 2021-12

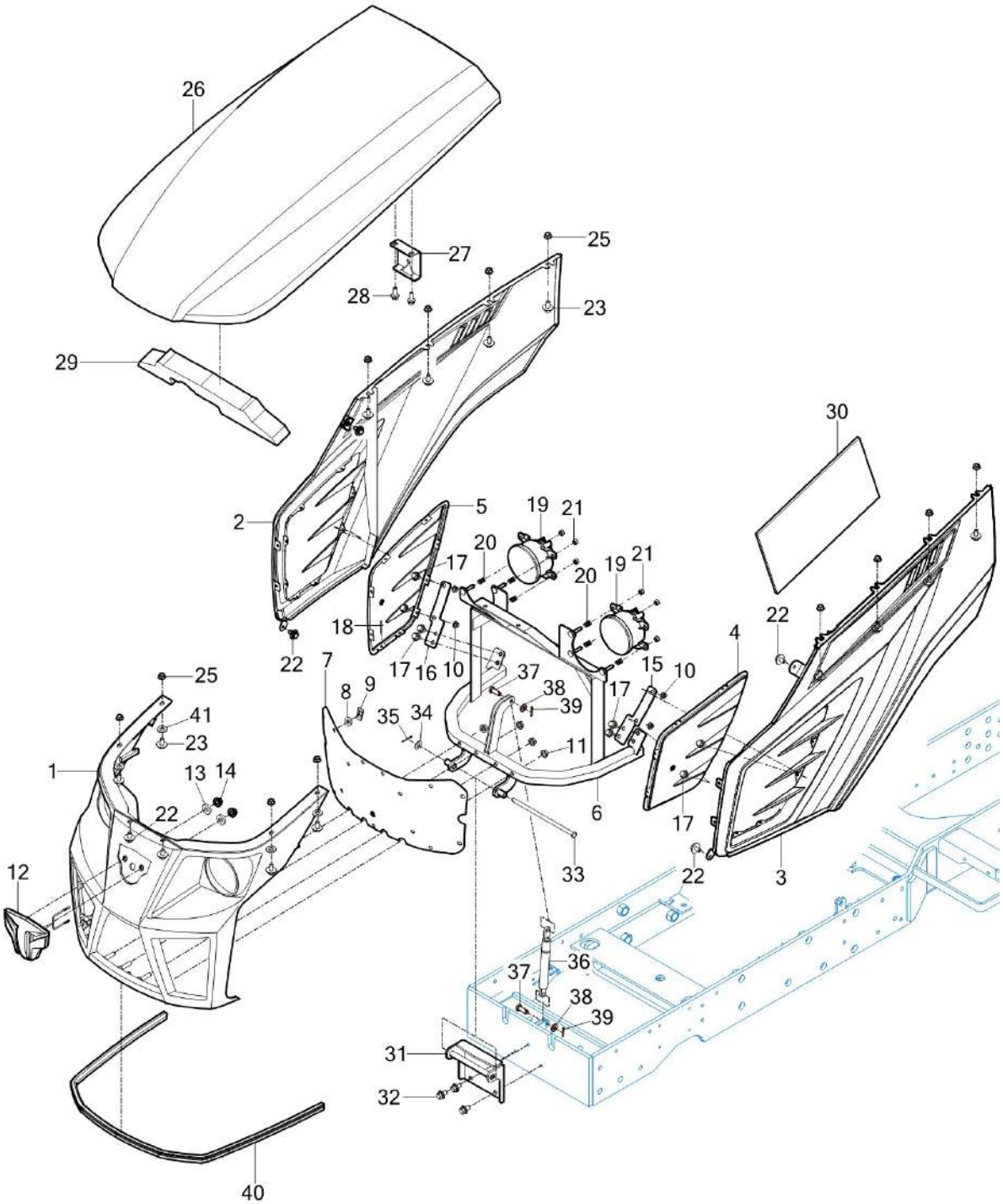

NOTE

FIG T25NH	BONNET	년/월 Year/Month 2021-12

KEY NO		PART NO	DESCRIPTION	SPEC	QTY	REPAIR	EFFECTIVE DATE	REMARKS
	1	11816012400GB	GRILL COMP		1			
	2	11816012300SR	SIDE PANEL COMP , RH		1			
	3	11816012200SR	SIDE PANEL COMP , LH		1			
	4	11816020020GB	NET , LH / SIDE PANEL		1			
	5	11816020030GB	NET , RH / SIDE PANEL		1			
	6	11816022100GB	HOOD FRAME COMP		1			
	7	11816020010GB	NET , FR / GRILL		1			
	8	14446010150	WASHER , NET		15			
	9	V3501600060	NUT, PUSH-ON SPRING		15			
	10	V3802600060	NUT , HEX FLANGE		4			
	11	V3802600080	NUT , HEX FLANGE		4			
	12	11816010100	EMBLEM ASSY , LED		1			
	13	V4111600060	WASHER , PLAIN		2			
	14	V3802600060	NUT , HEX FLANGE		2			
	15	11816022210GB	FIX PLATE , LH		1			
	16	11816022310GB	FIX PLATE , RH		1			
	17	V2193606016	BOLT , HEX/SPL		8			
	18	V5502040093	RIVET , BLIND		14			
	19	11816020090	HEAD LAMP, LED		2			
	20	16998010080	SPRING , HC016		6			
	21	19027210060	NUT , NYLON , M6		6			
	22	V2193606016	BOLT , HEX/SPL		6			
	23	V2193606016	BOLT , HEX/SPL		12			
	25	V3802600060	NUT , HEX FLANGE		12			
	26	11816012100SR	HOOD		1			
	27	13156012213	BRACKET , STAY		1			
	28	V2183608020	BOLT , HEX/SP		2			
	29	11816020060	INSULATOR , UPPER / HOOD		1			
	30	16506010140	SPONGE		1			
	31	11816013100GB	BRACKET COMP , HINGE		1			
	32	V2173608020	BOLT , HEX/S		3			
	32	V2183608025	BOLT , HEX/SP		3			
	33	13016202060	PIN , HOOD		1			
	34	V4111600080	WASHER , PLAIN		1			
	35	V5001925020	PIN D2.5x20		1			
	36	11816022400	GAS SPRING , 70kgf		1			
	37	14322420010	PIN		2			
	38	V4111600080	WASHER , PLAIN		2			
	39	V5001925015	PIN , SPLIT		2			
	40	11816020050	INSULATOR , SIDE / HOOD		1			
	41	19026112050	WASHER , 6X30X2.3		4			

NOTE	

FIG T25NH	DASH PANEL	년/월 Year/Month 2021-12

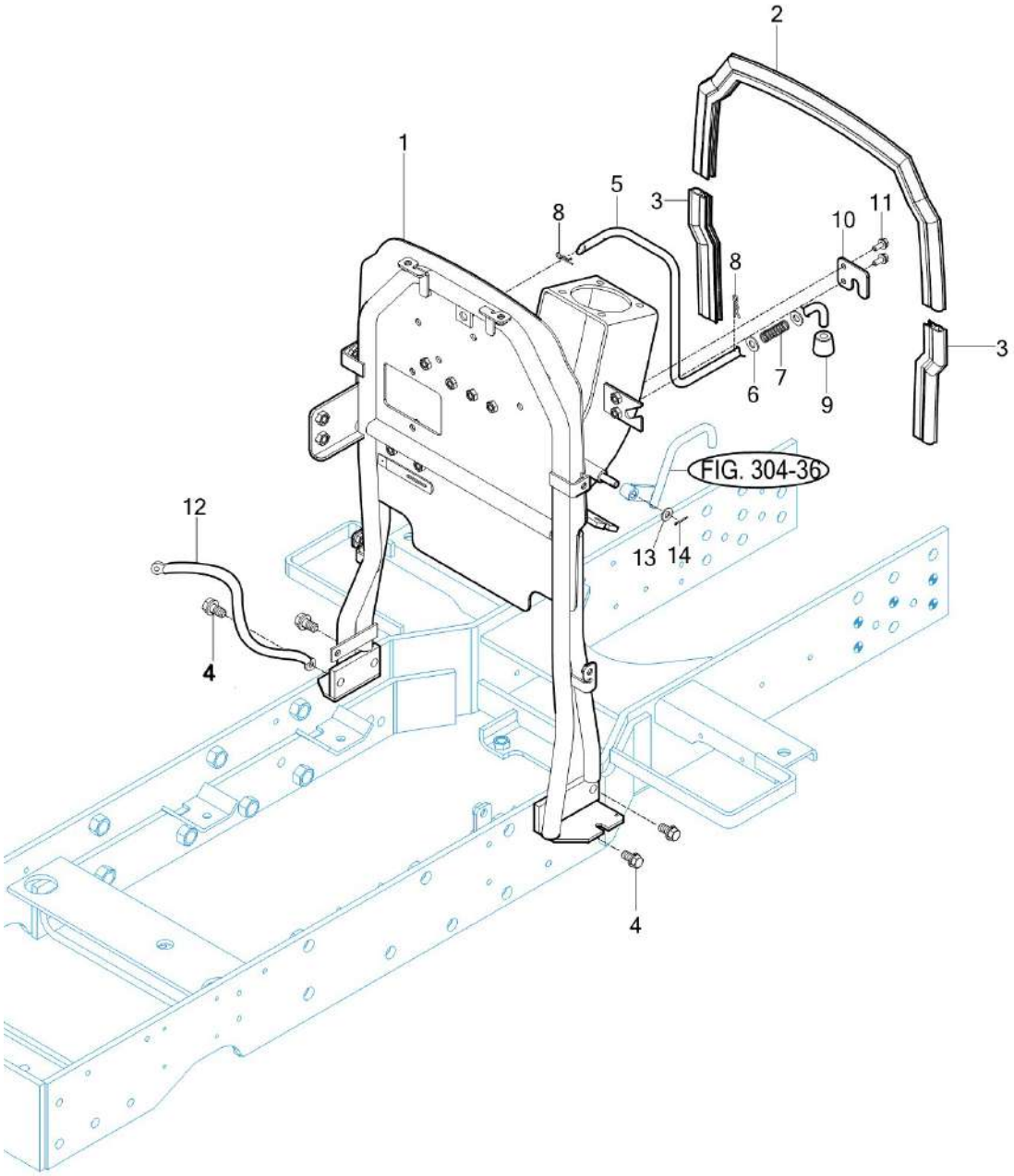

NOTE	

FIG T25NH	DASH PANEL	년/월 Year/Month 2021-12

KEY NO		PART NO	DESCRIPTION	SPEC	QTY	REPAIR	EFFECTIVE DATE	REMARKS
	1	11816303000GB	DASH PANEL COMP		1			
	2	11816300010	INSULATOR , UPR DASH		1			
	3	11816300040	INSULATOR , LOW DASH		2			
	4	V2183610025	BOLT , HEX/SP		4			
	5	13156300023GB	PIN , HOOD LOCK		1			
	6	V4111600100	WASHER , PLAIN	M10	2			
	7	13156300030	SPRING		1			
	8	V5601600010	PIN , SNAP	10	2			
	9	14721120090	GRIP , HOOD LOCK		1			
	10	11816300030GB	FIX PLATE , HOOD OPEN		1			
	11	V2123606020	BOLT , HEX /SP		2			
	12	13366684300	WIRE,EARTH		1			
	13	V4111600080	WASHER , PLAIN		1			
	14	V5001925020	PIN D2.5x20		1			

NOTE	

FIG T25NH	FLOOR	년/월 Year/Month 2021-12

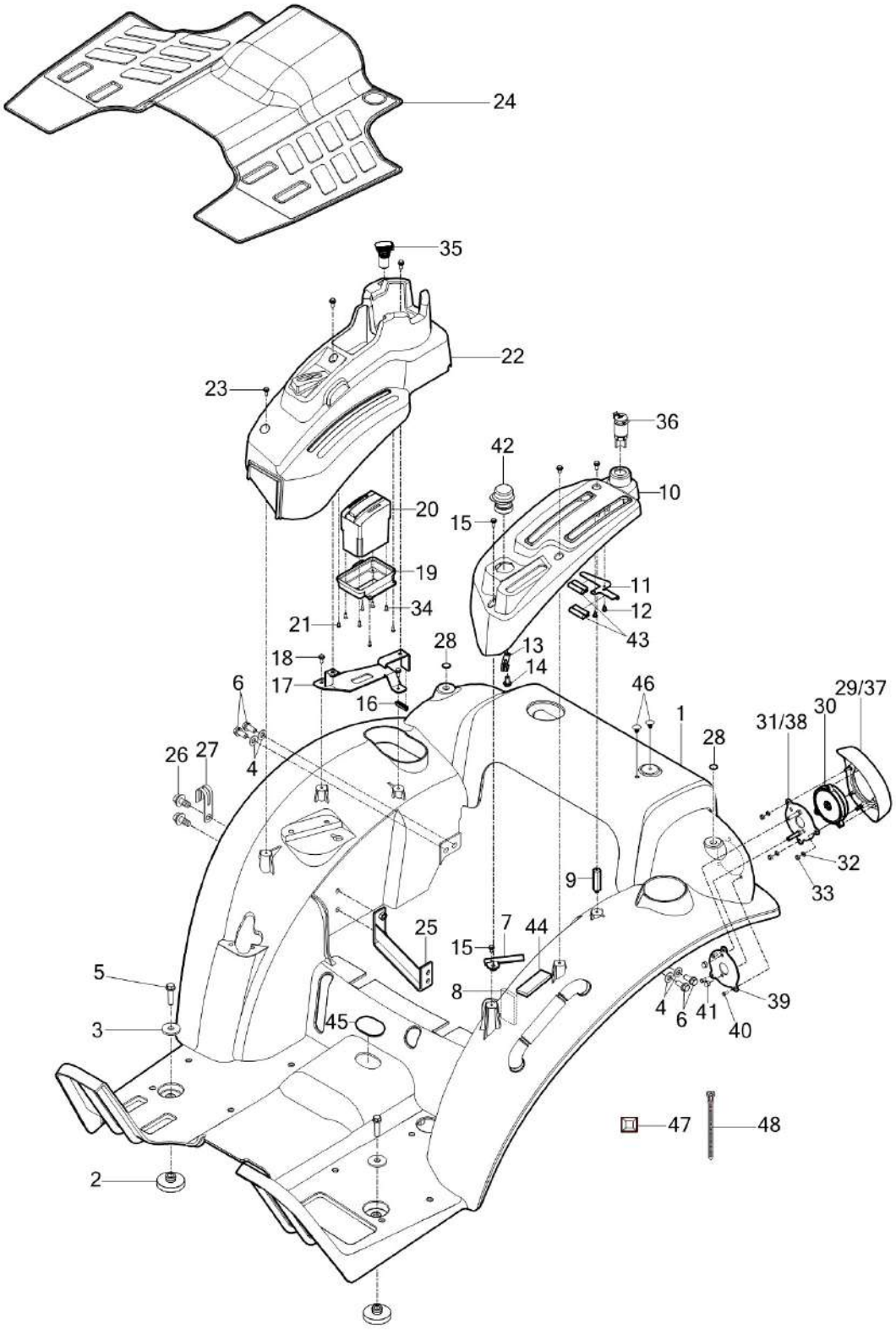

NOTE	

FIG T25NH	FLOOR	년/월 Year/Month 2021-12

KEY NO		PART NO	DESCRIPTION	SPEC	QTY	REPAIR	EFFECTIVE DATE	REMARKS
	1	13156402114SR	PANEL , FLOOR		1			
	2	13156252121	INSULATOR		2			
	3	13156252110	PLATE		2			
	4	V4111600100	WASHER , PLAIN	M10	4			
	5	V2173612040	BOLT , HEX/S	M12X40	2			
	6	V2173610040	BOLT , HEX/S	M10X40	4			
	7	11817082300GB	BRACKET COMP , FR/LEVER COVER		1			
	8	11816400010	INSULATOR , 4WD		1			
	9	11817095440	BOLT , COVER		1			
	10	11817082100	LEVERCOVER SUB , LH		1			
	11	11816400020GB	PLATE, PTO LEVER		1			
	12	V1902605012	SCREW , TAPPING C/R PAN/3		2			
	13	37371720090	CLAMP , W/HARNESS		1			
	14	19406110080	TAPPING SCREW , TRUSS/6X16		1			
	15	V1222806012	SCREW , C/R PAN/SP		4			
	16	11816030020	INSULATOR , RH / LEVER COVER		1			
	17	11817082400GB	BRACKET COMP , LEVER COVER		1			
	18	V1222806012	SCREW , C/R PAN/SP		2			
	19	11817082220NG	LEVER COVER , LOW / RH		1			
	19	11817082220	LEVER COVER , LOW / RH		1			
	20	11816602300	WIRELESS CHARGE ASSY		1			
	21	V1922604012	SCREW , TAPPING		4			
	22	11817082210NG	LEVER COVER , UPPER /RH		1			
	23	V1222806012	SCREW , C/R PAN/SP		3			
	24	13186412110	MAT , FLOOR		1			
	25	13196253100GB	PLATE COMP, RH SUPPROT FENDER		1			
	26	V2183608025	BOLT , HEX/SP		2			
	27	14256210040	CLAMP , 9		1			
	28	16606070031	CAP , 9		2			
	29	11817023500NG	STOP LAMP COVER , LH		1			
	30	11817023400	LAMP ASSY . STOP		2			
	31	11817023700	FIX PLATE COMP , LH / STOP LAMP		1			
	32	V4011600060	WASHER , SPRING		6			
	33	V3412700080	NUT , SMALL CAP		6			
	34	V1122804012	SCREW , C/R FLAT		4			
	35	11817018500	USB SOCKET ASSY		1			
	36	10037018500	SOCKET ASSY , POWER		1			
	37	11817023600NG	STOP LAMP COVER , RH		1			
	38	11817023800	FIX PLATE COMP , RH / STOP LAMP		1			
	39	11817023710	FIX PLATE , STOP LAMP		2			
	40	V1922605012	SCREW , TAPPING		6			
	40	13366050120	SCREW , TAPPING C/R PAN/4		6			
	40	V1922605012	SCREW , TAPPING		6			
	41	V3412700080	NUT , SMALL CAP		4			
	42	11106644000	SWITCH ASSY , PTO		1			

NOTE	

FIG T25NH	FLOOR	년/월 Year/Month 2021-12

KEY NO		PART NO	DESCRIPTION	SPEC	QTY	REPAIR	EFFECTIVE DATE	REMARKS
	43	11816400030	INSULATOR , 40 / LEVERCOVER		2			
	44	11816400040	INSULATOR , LOW /4WD LEVER		1			
	45	14706300020	CAP , SLOW RETURN		1			
	46	15276040020	CLIP , TRIM		2			
	47	14536680010	MOUNT , TIE		2			
	48	13764020030	CABLE TIE , 140		2			

NOTE	

FIG T25NH	SEAT	년/월 Year/Month 2021-12

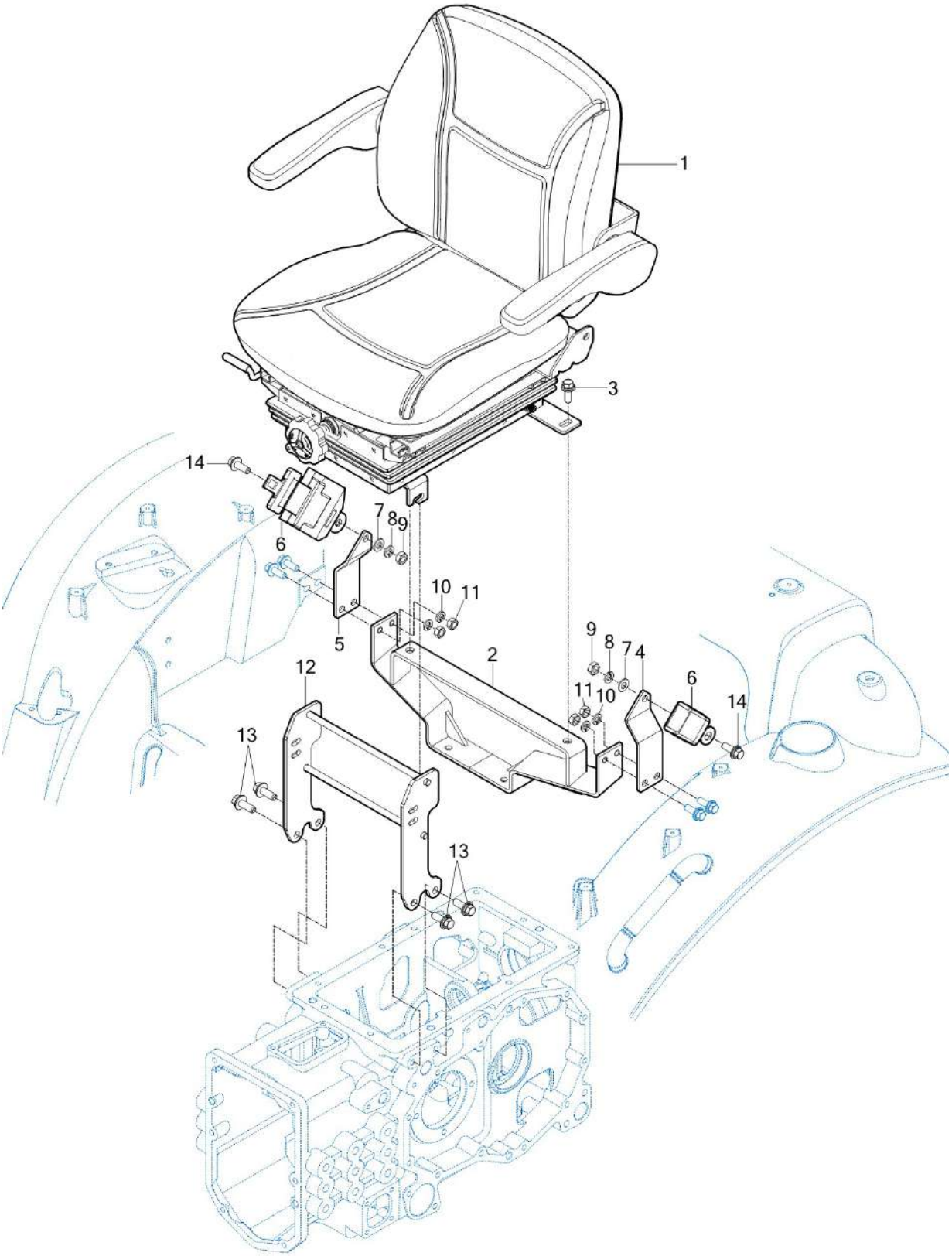

NOTE	

FIG T25NH	SEAT	년/월 Year/Month 2021-12

KEY NO		PART NO	DESCRIPTION	SPEC	QTY	REPAIR	EFFECTIVE DATE	REMARKS
	1	11816122000	SEAT ASSY		1			
	2	13196313100	BRACKET COMP , SEAT SUPPORT		1			
	3	V2183610030	BOLT , HEX/SP		2			
	4	11816110020GB	BRACKET , SEAT BELT / LH		1			
	5	11816110030GB	BRACKET , SEAT BELT / RH		1			
	6	11811612200	SEAT BELT ASSY		1			
	7	V4111600100	WASHER , PLAIN		2			
	8	V4011600100	WASHER , SPRING		2			
	9	V3043600100	NUT , HEX/2		2			
	10	V4011600100	WASHER , SPRING		4			
	11	V3043600100	NUT , HEX/2		4			
	12	13193286201GB	SEAT BRACKET COMP , EU		1			
	13	V2183610025	BOLT , HEX/SP		4			
	14	V2183610025	BOLT , HEX/SP		2			

NOTE	

FIG T25NH	ROPS	년/월 Year/Month 2021-12

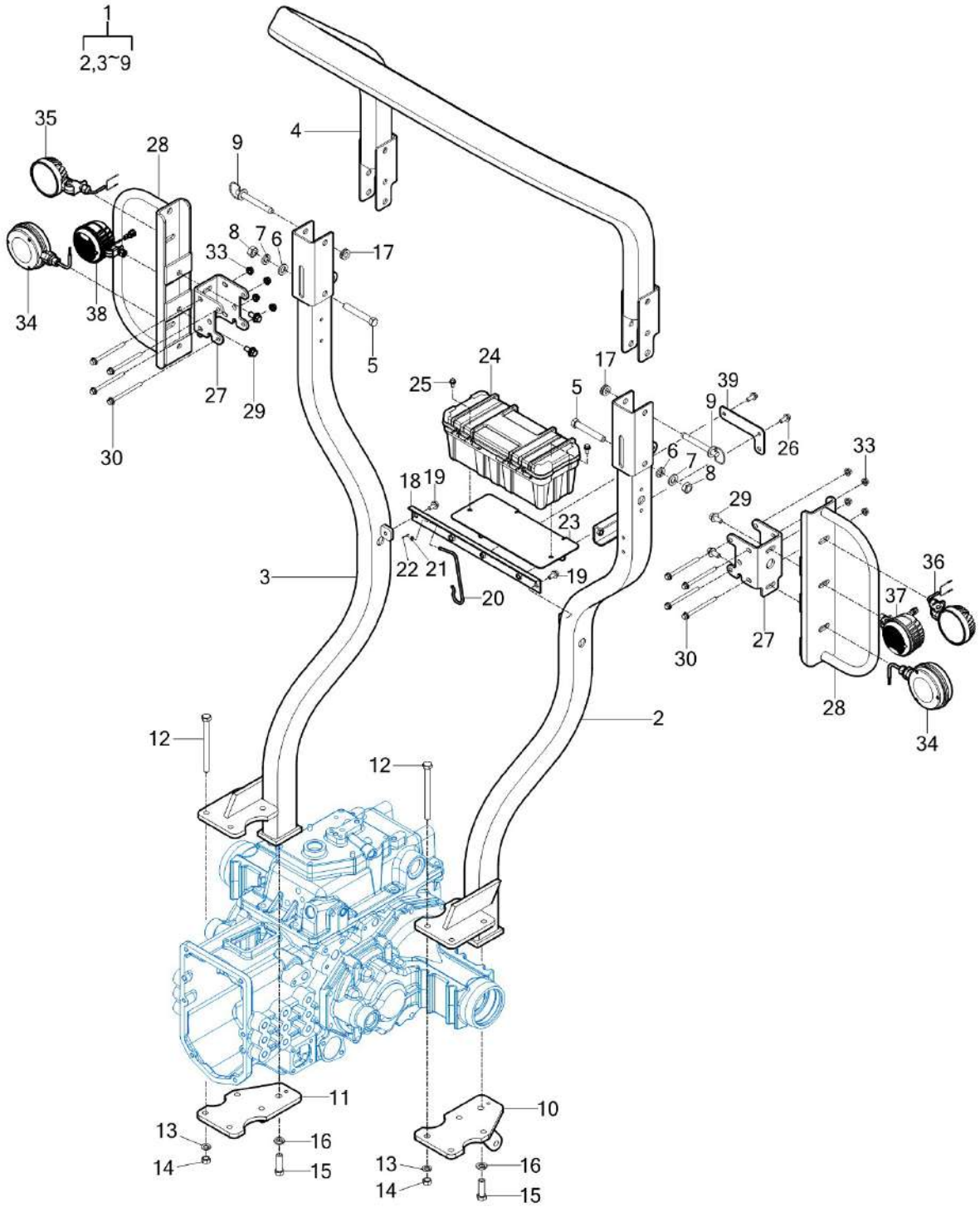

NOTE

FIG T25NH	ROPS	년/월 Year/Month 2021-12

KEY NO		PART NO	DESCRIPTION	SPEC	QTY	REPAIR	EFFECTIVE DATE	REMARKS
	1	11817022000	ROPS ASSY		1			
	2	11817022100GB	FRAME COMP , LH		1			
	2	11817022101GB	FRAME COMP , LH		1			
	3	11817023100GB	FRAME COMP , RH		1			
	4	13397024100GB	FRAME COMP , UPR		1			
	5	V2004614090	BOLT , HEX		2			
	6	V4111600140	WASHER , PLAIN		2			
	7	V4011600140	WASHER , SPRING		2			
	8	V3043600140	NUT , HEX/2		2			
	9	16507027500	PIN COMP , FIXED		2			
	10	11817022201GB	BRACKET COMP , LH		1			
	11	11817023201GB	BRACKET COMP , RH		1			
	12	V2004612150	BOLT , HEX		8			
	13	V4011600120	WASHER , SPRING		8			
	14	V3043600120	NUT , HEX/2		8			
	15	V2013614045	BOLT , HEX		2			
	16	V4011600120	WASHER , SPRING		2			
	17	14046210300	GROMMET		2			
	18	13197035401GB	BRACKET COMP		1			
	19	V2183608025	BOLT , HEX/SP		2			
	20	16705251100	HOOK , TOPLINK		1			
	21	V4111600050	WASHER , PLAIN		1			
	22	V5001920015	PIN , SPLIT		1			
	23	11817011100GB	BRACKET COMP , TOOLBOX		1			
	23	11817035400GB	BRACKET COMP , TOOLBOX		1			
	24	13836081180	TOOL BOX		1			
	25	V2183608020	BOLT , HEX/SP		2			
	26	V2183606020	BOLT , HEX/SP		2			
	27	11817120010GB	PLATE , COMBI		2			
	28	11817122100GB	BRACKET COMP , COMBI LAMP		2			
	29	V2183610025	BOLT , HEX/SP		4			
	30	V2013608100	BOLT , HEX		8			
	30	V2183608100	BOLT , HEX/SP		8			
	31	V4111600080	WASHER , PLAIN		8			
	32	V4011600080	WASHER , SPRING		8			
	33	V3802600080	NUT , HEX FLANGE		8			
	34	11616562000	LAMP ASSY , DOUBLE-SIDE		2			
	35	11817025800	LAMP ASSY , WORKING RH		1			
	36	11817025700	LAMP ASSY , WORKING LH		1			
	37	11817025500	W.P SPEAKER ASSY(LH)		1			
	38	11817025600	W.P SPEAKER ASSY (RH)		1			
	39	11817012010GB	BRACKET , SMV		1			

NOTE	

FIG T25NH	CAB FRAME & DOOR(OPTION)	년/월 Year/Month 2021-12

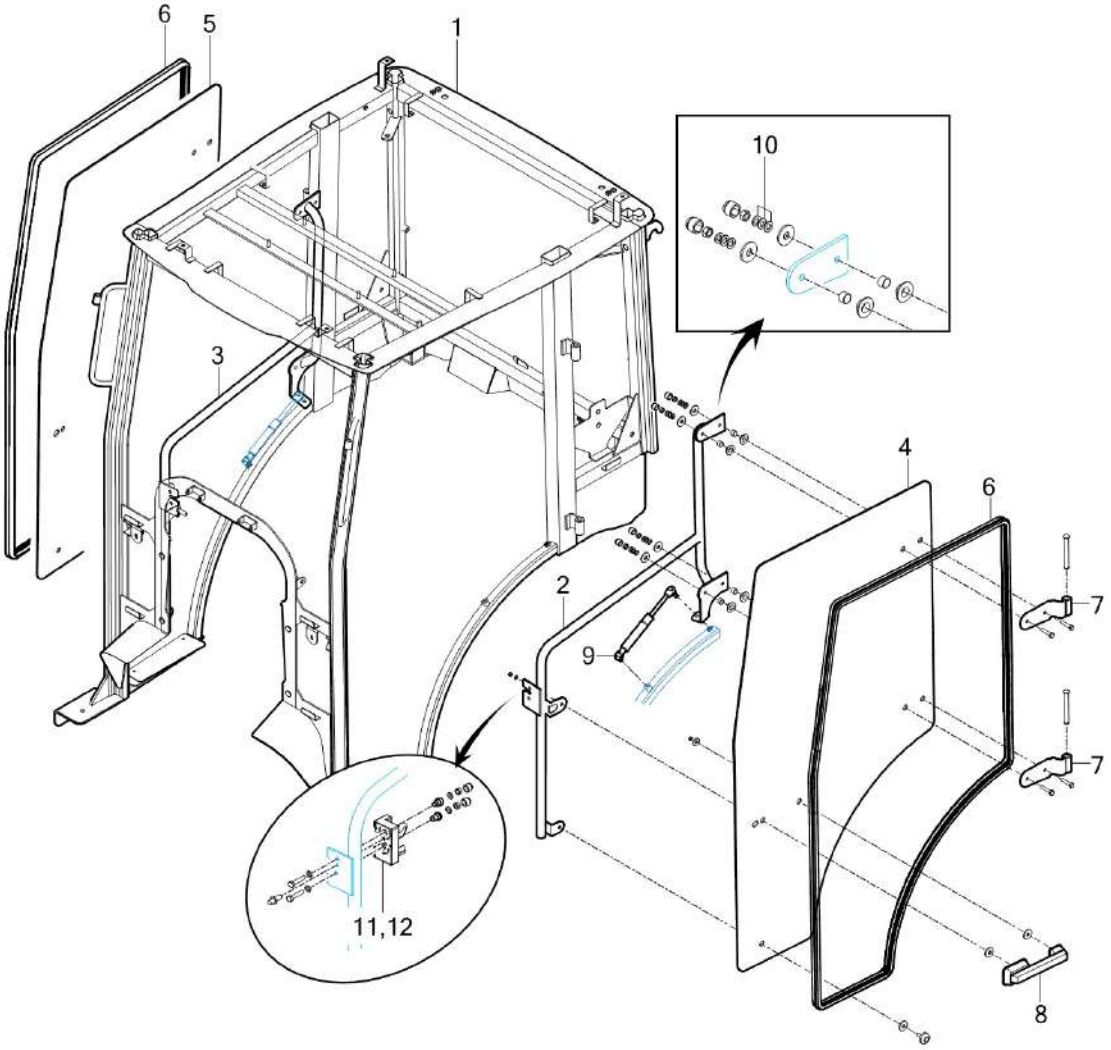

NOTE	

FIG T25NH	CAB FRAME & DOOR(OPTION)	년/월 Year/Month 2021-12

KEY NO		PART NO	DESCRIPTION	SPEC	QTY	REPAIR	EFFECTIVE DATE	REMARKS
	1	11817032000GB	FRAME COMP,CABIN(T25)		1			
	2	11817023500GB	FRAME ASSY , DOOR (LH)		1			
	3	11817023600GB	FRAME ASSY , DOOR (RH)		1			
	4	13187023140	GLASS , DOOR (LH)		1			
	5	13187023150	GLASS , DOOR (RH)		1			
	6	13347023220	INSULATOR (GLASS,DOOR)		2			
	7	13347024200	HINGE ASSY , DOOR		4			
	8	13347024700	GRIP , DOOR		2			
	9	11817023900	DAMPER , DOOR		2			
	10	13347023480	PACKING , RUBBER		24			
	11	13347024400	LOCK ASSY , LH		1			
	12	13347024500	LOCK ASSY , RH		1			

NOTE	

FIG T25NH	FRONT GLASS(OPTION)	년/월 Year/Month 2021-12

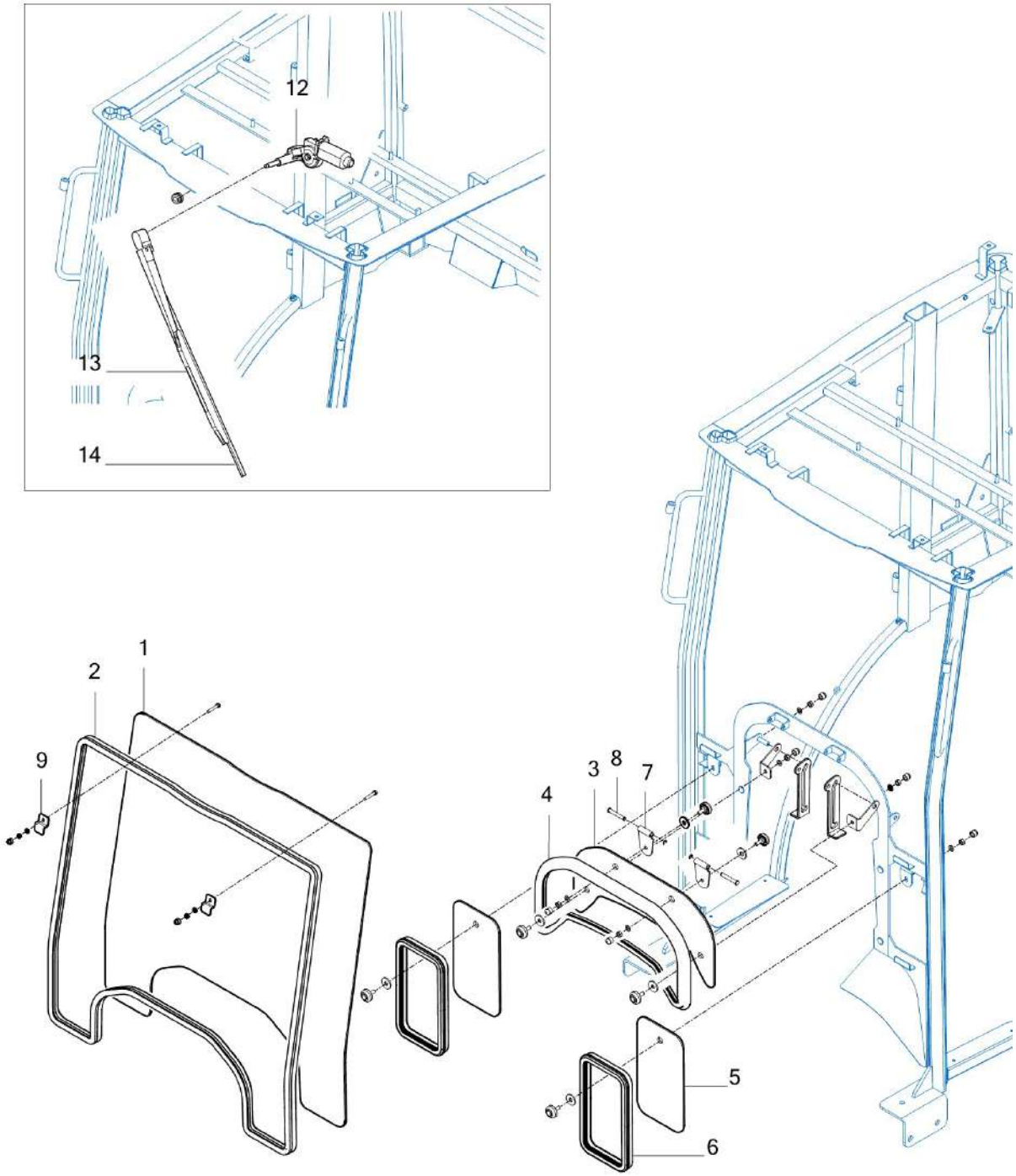

NOTE	

FIG T25NH	FRONT GLASS(OPTION)	년/월 Year/Month 2021-12

KEY NO		PART NO	DESCRIPTION	SPEC	QTY	REPAIR	EFFECTIVE DATE	REMARKS
	1	13187023110	GLASS (F,U)		1			
	2	13347023180	INSULATOR (GLASS,F/U)		1			
	3	11817023120	GLASS (F/M)		1			
	4	11817023190	INSULATOR (GLASS,F/M)		1			
	5	13187023130	GLASS (F,L)		2			
	6	13347023210	INSULATOR (GLASS,F/L)		2			
	7	13347023280	BRACKET , GLASS (M)		2			
	8	13347023290	PIN B		2			
	9	13347023260	BRACKET , GLASS		2			
	12	13347025600	WIPER MOTOR ASSY		1			
	13	13347025700	ARM , WIPER		1			
	14	13347025800	BLADE , WIPER		1			

NOTE	

FIG T25NH	SIDE & REAR GLASS(OPTION)	년/월 Year/Month 2021-12

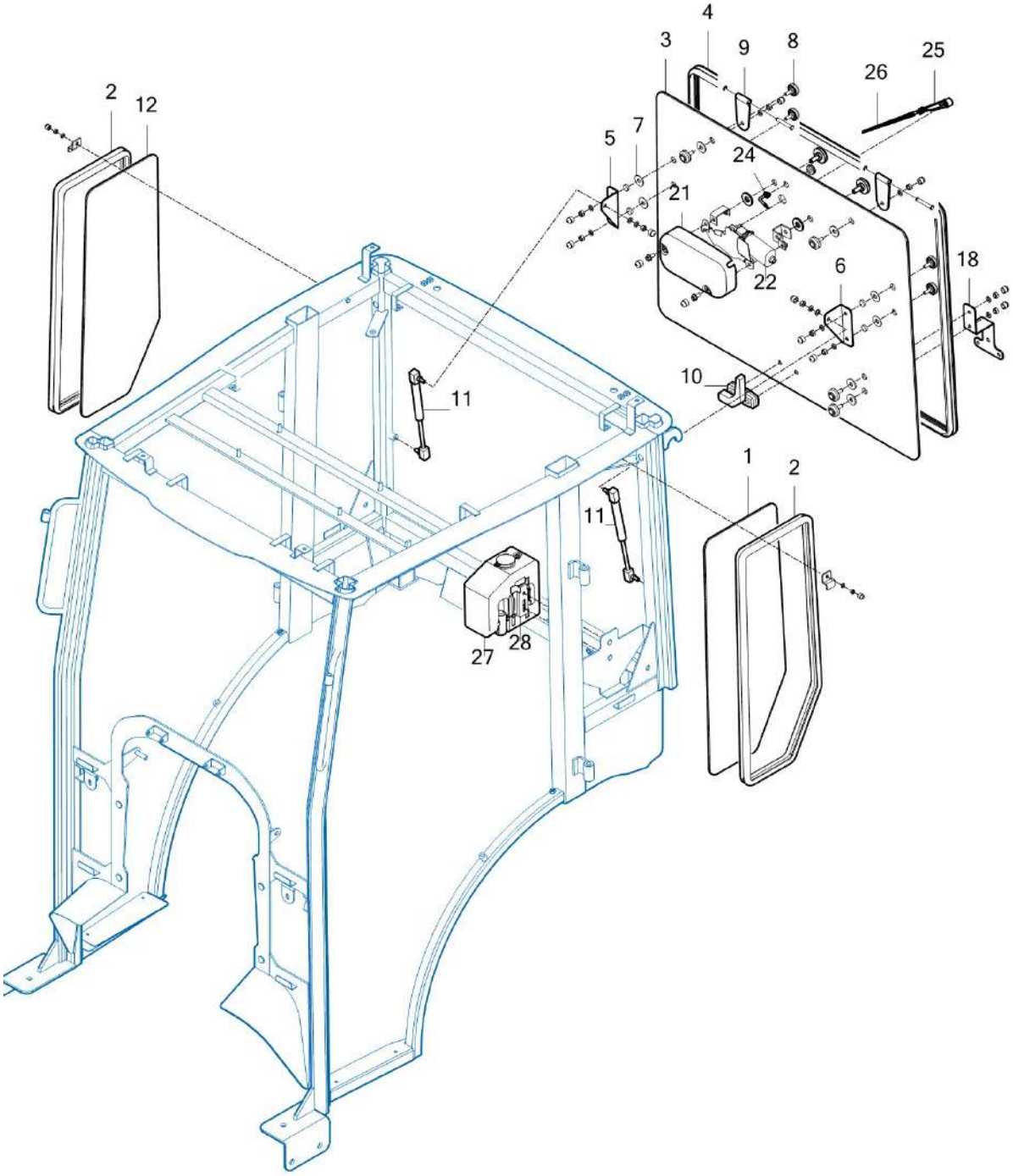

NOTE	

FIG T25NH	SIDE & REAR GLASS(OPTION)	년/월 Year/Month 2021-12

KEY NO		PART NO	DESCRIPTION	SPEC	QTY	REPAIR	EFFECTIVE DATE	REMARKS
	1	11817023160	GLASS (S)		1			
	2	11817033230	INSULATOR (GLASS,S)		2			
	3	11817023180	GLASS(REAR)		1			
	4	13347023240	INSULATOR (GLASS,R)		1			
	5	13347023800	BRACKET , DAMPER (RH)		1			
	6	13347023700	BRACKET , DAMPER (LH)		1			
	7	13347023270	PACKING 1		36			
	8	13347023250	CUSHION BOLT		18			
	9	13347024300GB	HINGE , GLASS (R)		2			
	10	13347024600	GRIP , GLASS (R)		1			
	11	13347024100	DAMPER , GLASS (R)		2			
	12	11817023170	GLASS (S)		1			
	18	11817036720GB	BRACKET , SMV		1			
	21	11817025290	COVER , MOTOR		1			
	22	11816025600	WIPER MOTOR ASSY		1			
	24	11817025280	GROMET , WIERMOTOR		1			
	25	11817026900	ARM , WIPER		1			
	26	11817035800	BLADE , WIPER		1			
	27	11817025510	TANK 2.5L		1			
	28	11817025520	BRACKET , TANK		1			

NOTE	

FIG T25NH	ROOF(OPTION)	년/월 Year/Month 2021-12

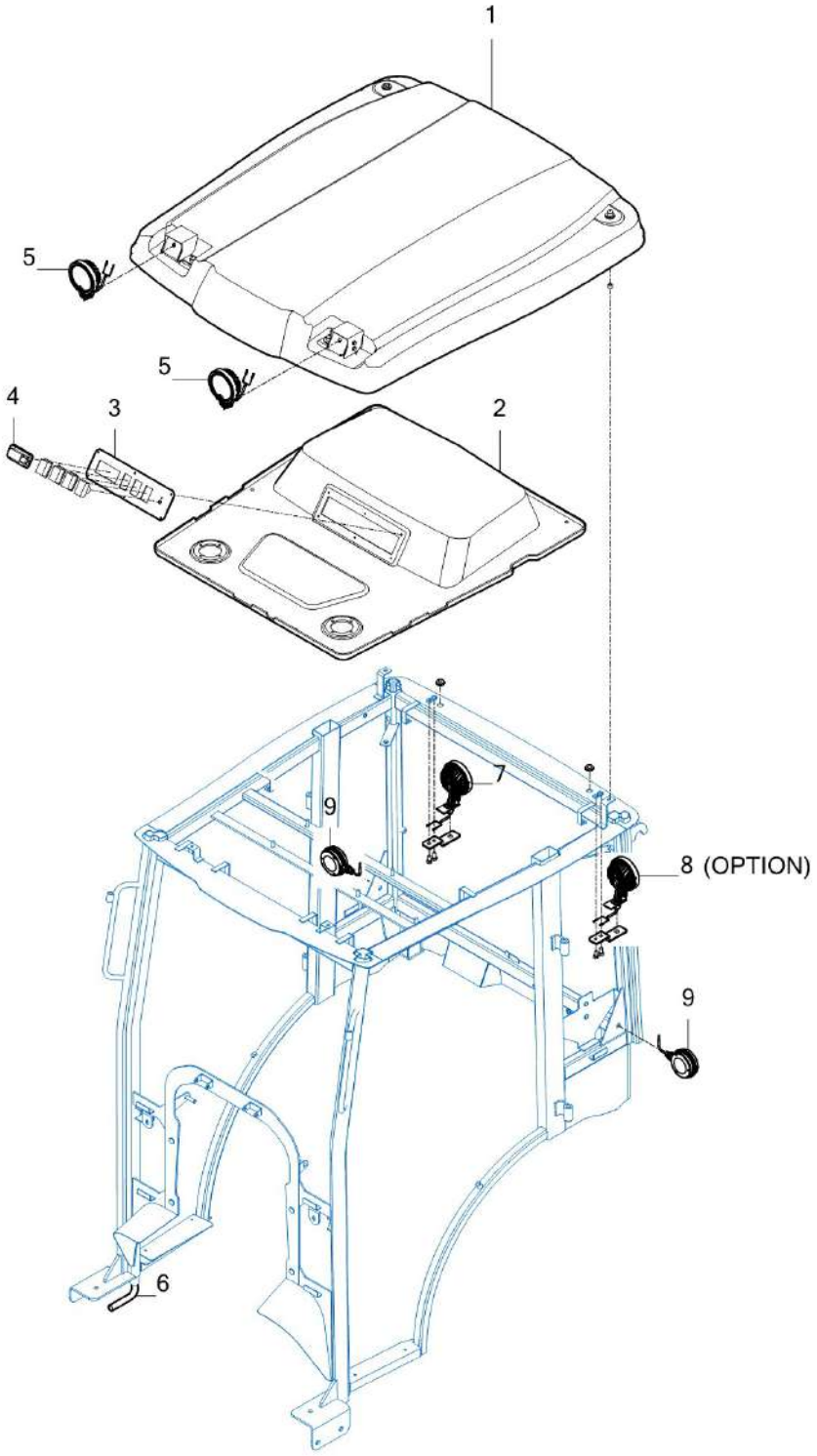

NOTE	

FIG T25NH	ROOF(OPTION)	년/월 Year/Month 2021-12

KEY NO		PART NO	DESCRIPTION	SPEC	QTY	REPAIR	EFFECTIVE DATE	REMARKS
	1	11817035200SR	ROOF		1			
	2	11817035100	PLATE , ROOF		1			
	3	11817036210GB	PANEL , SWITCH		1			
	4	11817035300	LAMP ASSY , ROOM		1			
	5	11817025800	LAMP ASSY , WORKING RH		2			
	7	11817025800	LAMP ASSY , WORKING RH		1			
	8	11817025800	LAMP ASSY , WORKING RH		1			
	9	11616562000	LAMP ASSY , DOUBLE-SIDE		1			

NOTE	

FIG T25NH	HEATER(OPTION)	년/월 Year/Month 2021-12

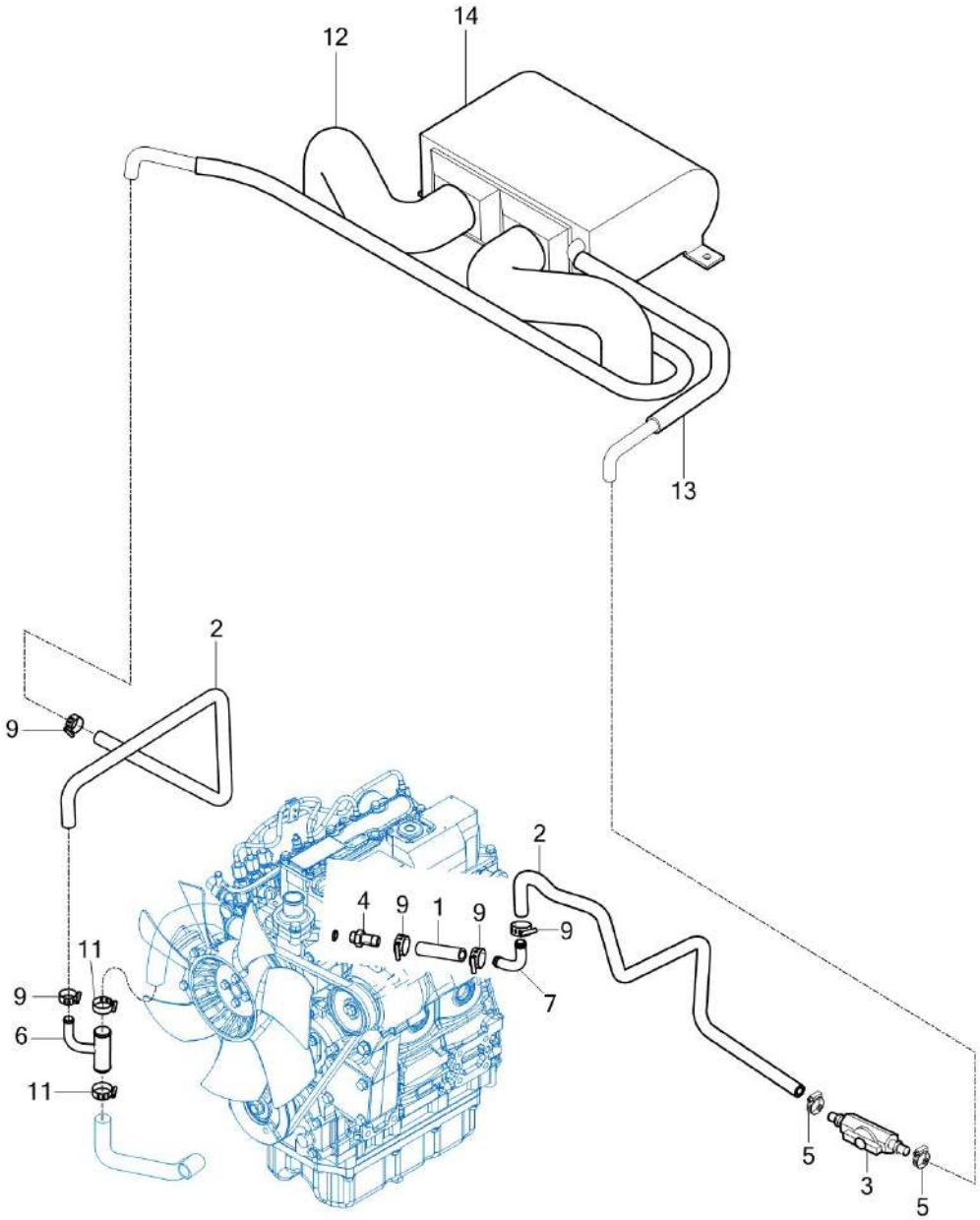

NOTE	

FIG T25NH	HEATER(OPTION)	년/월 Year/Month 2021-12

KEY NO		PART NO	DESCRIPTION	SPEC	QTY	REPAIR	EFFECTIVE DATE	REMARKS
	1	11817081120	HOSE , ENGINE/OUT		1			
	2	11817081130	HEATER HOSE , THERMOSTAT		2			
	3	11818202100	VALVE ASSY , HEATER		1			
	4	13347033170	ADAPTOR(M16X1.5)		1			
	5	37681850160	BAND CLAMP 25		2			
	6	11108202700	PIPE COMP		1			
	7	13347023400	PIPE , CONNECTOR		1			
	9	18027090320	BAND CLAMP 32 EMBO TYPE		5			
	11	18027090500	BAND CLAMP 50 EMBO TYPE		2			
	12	13347023360	HOSE , DUCT		2			
	13	13347026400	HOSE , HEATER		2			
	14	13347026300	HEATER ASSY		1			

NOTE	

FIG T25NH	INTERIOR PART(OPTION)	년/월 Year/Month 2021-12

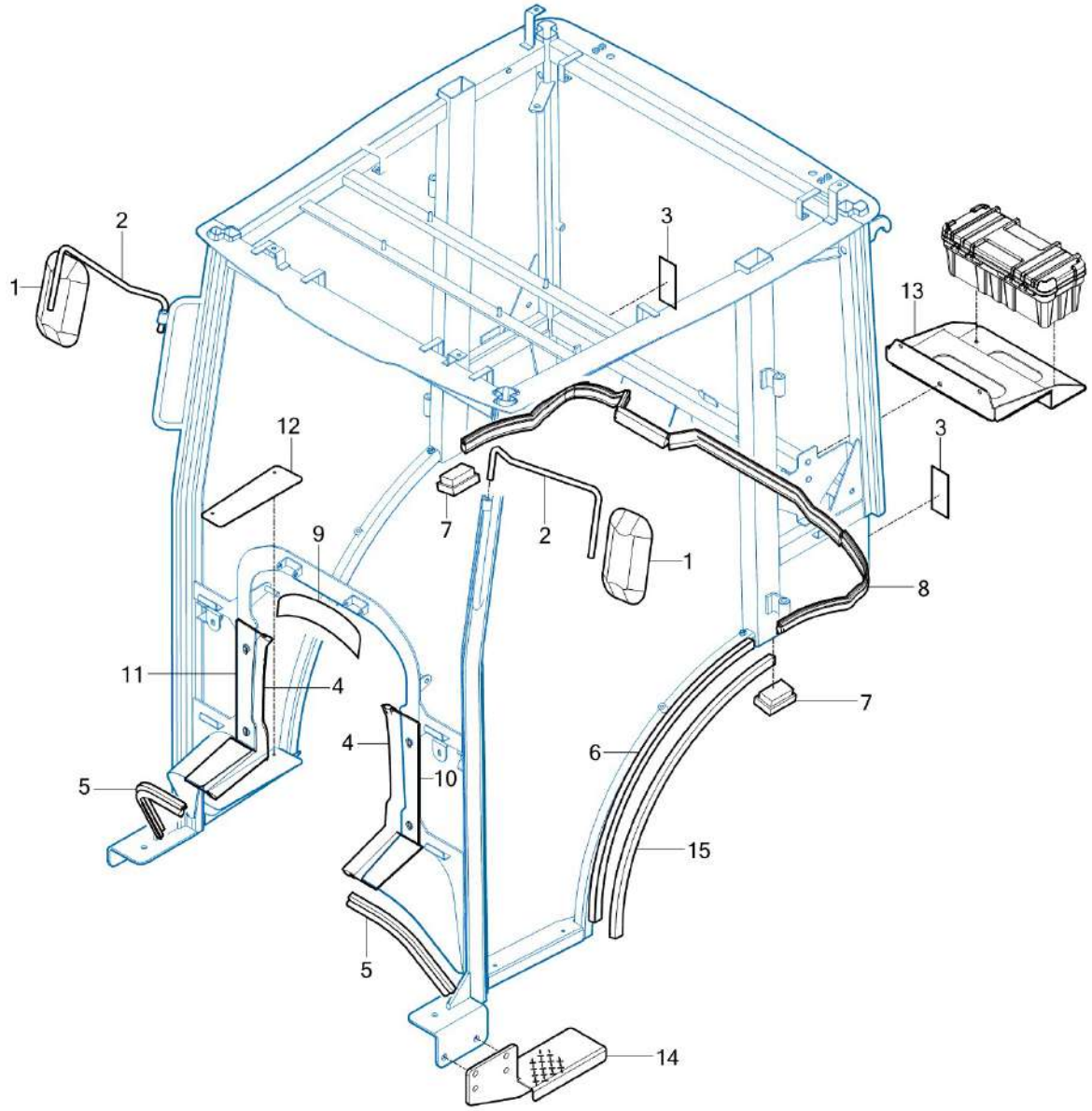

NOTE	

FIG T25NH	INTERIOR PART(OPTION)	년/월 Year/Month 2021-12

KEY NO		PART NO	DESCRIPTION	SPEC	QTY	REPAIR	EFFECTIVE DATE	REMARKS
	1	13347025900	MIRROR ASSY , BACK		2			
	2	13347026100	ROD , MIRROR (LH)		2			
	3	11506571000	REAR REFLECTOR		2			
	4	13347023460	INSULATOR , STAY (F)		2			
	5	13347023470	INSULATOR , STAY COVER		2			
	6	13347023440	SEAL PAD , DOOR FRAME		2			
	7	13347023450	SEAL PAD , DOOR POST (L)		2			
	8	13347023420	INSULATOR (L,SEAL)		1			
	9	13156030021	INSULATOR		2			
	10	11817023450GB	PLATE LH, SEALING		1			
	11	11817023460GB	PLATE RH, SEALING		1			
	12	11817034500GB	PLATE, STEP COVER		2			
	13	11817034100GB	BRACKET COMP , TOOLBOX		1			
	14	11817034400GB	PLATE, STEP COVER		1			
	15	11817023440	SPONGE , EPDM		2			

NOTE	

FIG T25NH	SEAL(OPTION)	년/월 Year/Month 2021-12

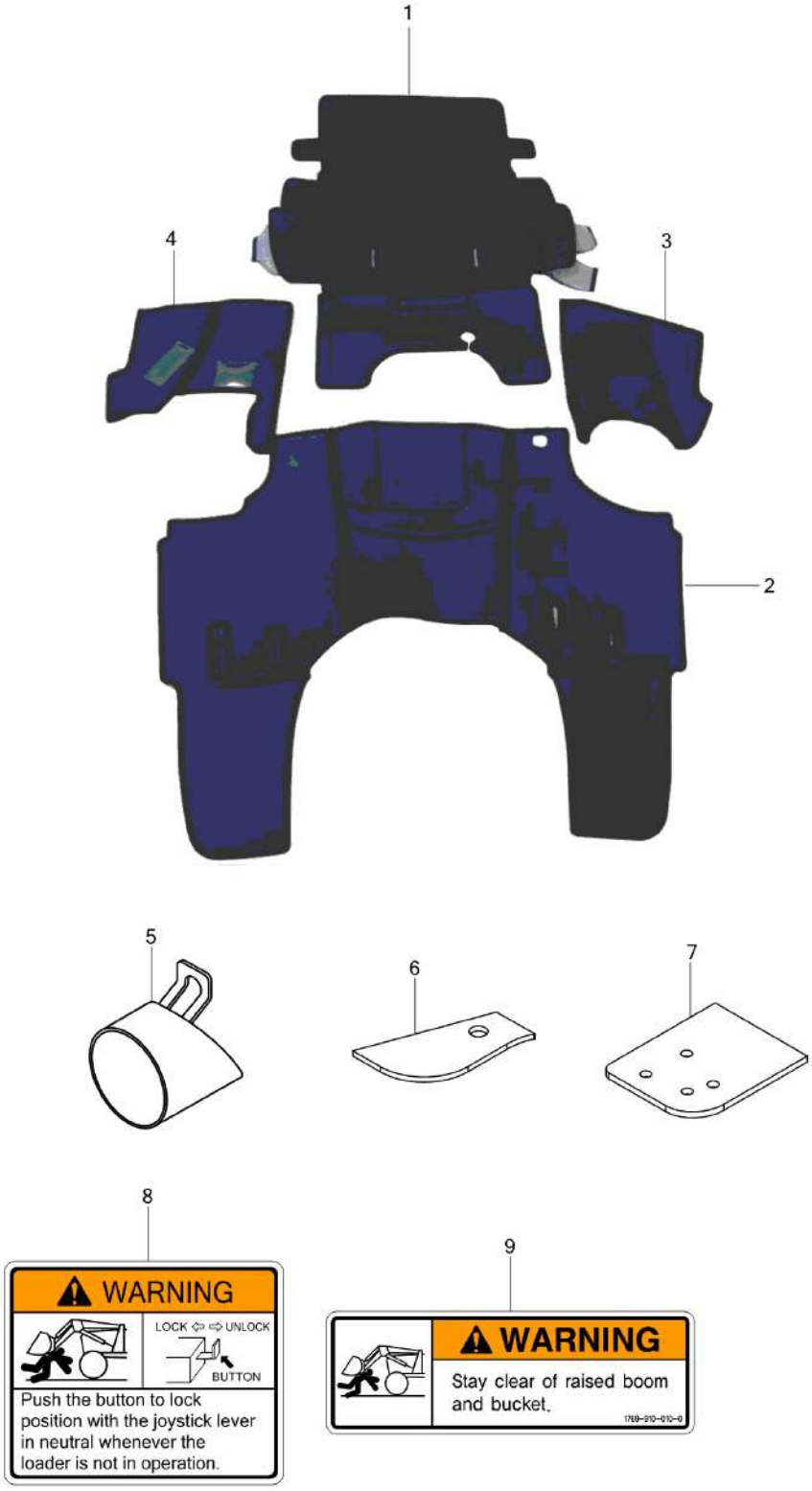

NOTE	

FIG T25NH	SEAL(OPTION)	년/월 Year/Month 2021-12

KEY NO		PART NO	DESCRIPTION	SPEC	QTY	REPAIR	EFFECTIVE DATE	REMARKS
	1	11817032150	SEAL , SEAT		1			
	2	11817032160	SEAL , FLOOR		1			
	3	11817032180	SEAL , FENDER LH		1			
	4	11817032170	SEAL , FENDER RH		1			
	5	11971053300	TIP COMP , MUFFLER		1			
	6	11811162610	INSULATOR , THROTTLE LEVER		1			
	7	11815252310	INSULATOR , JOYSTICK		1			
	8	17699100090	LABEL , WARNING JOYSTICK		1			
	9	17699100100	LABEL , WARNING JOYSTICK		1			

NOTE	

FIG T25NH	FRONT & REAR MOUNTING(OPTION)	년/월 Year/Month 2021-12

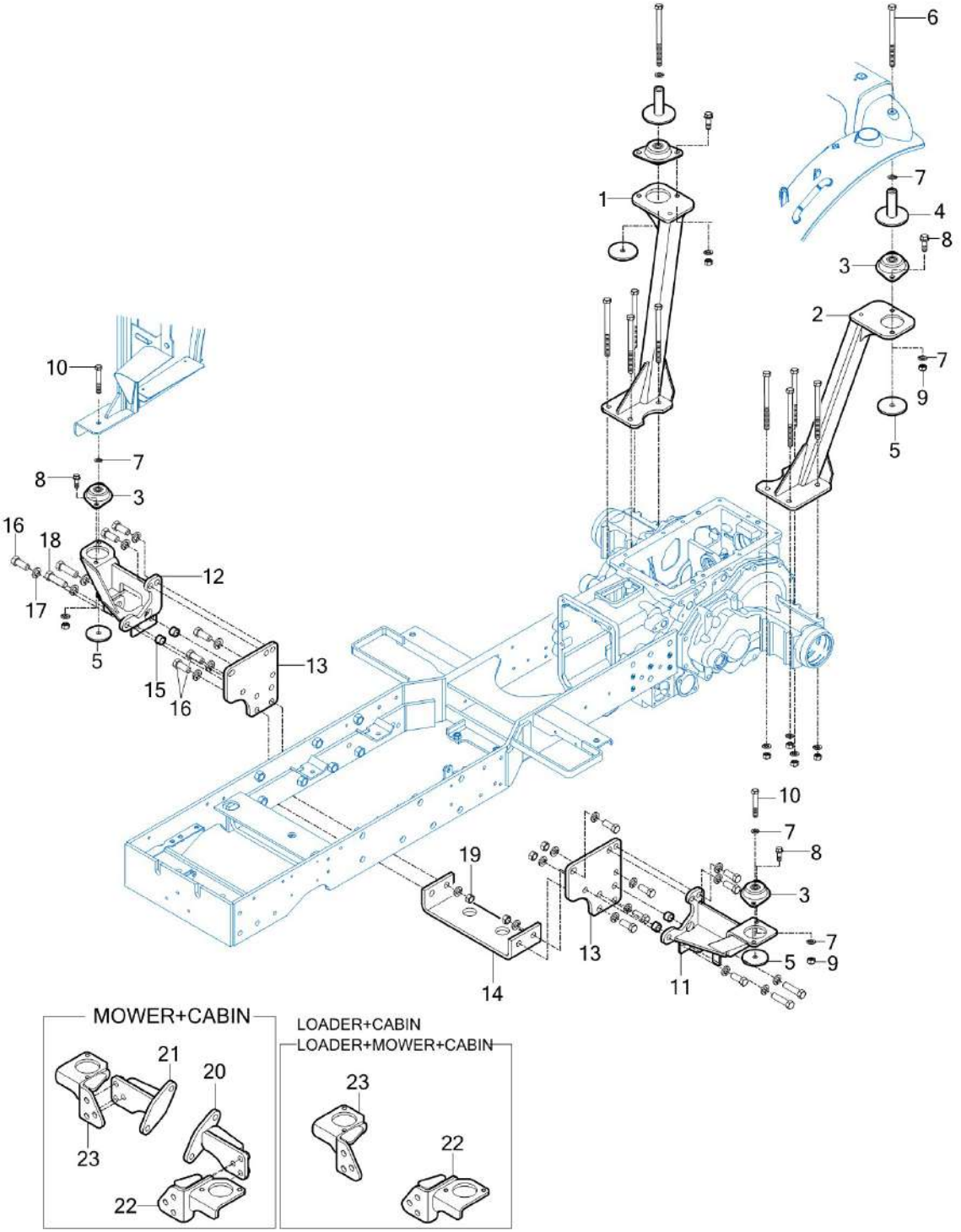

NOTE	

FIG T25NH	FRONT & REAR MOUNTING(OPTION)	년/월 Year/Month 2021-12

KEY NO		PART NO	DESCRIPTION	SPEC	QTY	REPAIR	EFFECTIVE DATE	REMARKS
	1	13347027800GB	SUPPORT COMP , MOUNTING (LH/R)		1			
	2	13347028100GB	SUPPORT COMP , MOUNTING (RH/R)		1			
	3	15966250010	INSULATOR		4			
	4	13347027710GB	SPACE PLATE , MOUNTING (R)		2			
	5	13347027300GB	PLATE COMP		4			
	6	V2014612160	BOLT , HEX		2			
	7	V4011600120	WASHER , SPRING		16			
	8	V2173612035	BOLT , HEX/S		8			
	9	V3043600120	NUT , HEX/2		8			
	10	V2014612075	BOLT , HEX		2			
	11	11817027400GB	BRACKET COMP , FR/LH MOUNTING		1			
	12	11817027500GB	BRACKET COMP , FR/RH MOUNTING		1			
	13	13347027110GB	SPACE PLATE , MOUNTING (F)		2			
	14	13347027610GB	GUIDE PLATE , MOUNTING (C)		1			
	15	13347027720	COLLAR		4			
	16	V2014616050	BOLT , HEX		13			
	17	V4011600160	WASHER , SPRING		19			
	18	V2013616065	BOLT , HEX		4			
	19	V3043600160	NUT , HEX/2		4			
	20	11817027200GB	BRACKET COMP , ADAPTOR FR/LH		1			
	21	11817027300GB	BRACKET COMP , ADAPTOR FR/RH		1			
	22	11817027400GB	BRACKET COMP , FR/LH MOUNTING		1			
	23	11817027500GB	BRACKET COMP , FR/RH MOUNTING		1			

NOTE	

8. Electrical System PART NO. T8

FIG BATTERY & MOUNTING 170
FIG LIGHTS 172
FIG INSTRUMENT PANEL 174
FIG ELECTRIC SYSTEM 176
FIG HARNESS 178
FIG HARNESS 180

FIG T25NH	BATTERY & MOUNTING	년/월 Year/Month 2021-12

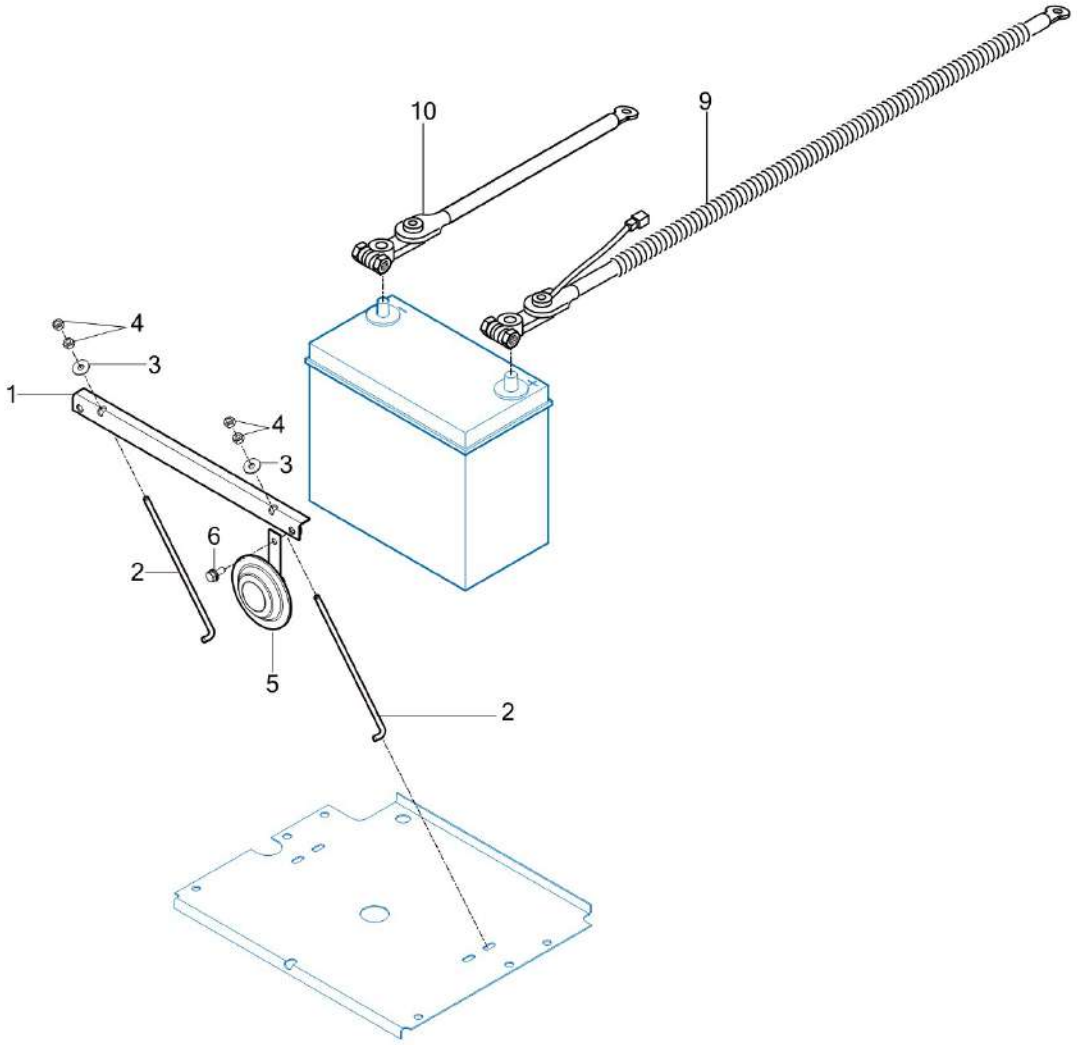

NOTE	

FIG T25NH	BATTERY & MOUNTING	년/월 Year/Month 2021-12

KEY NO		PART NO	DESCRIPTION	SPEC	QTY	REPAIR	EFFECTIVE DATE	REMARKS
	1	13151122201GB	PLATE COMP , SET		1			
	2	13151120061	BOLT , BATTERY SET		2			
	3	35605033020	WASHER , WIRE WITHDRAWAL		2			
	4	V3002600060	NUT , HEX/1	M6	4			
	5	13266212003	HORN		1			
	6	V2113606016	BOLT , HEX /S	M6X16	1			
	9	11616504200	CABLE ASSY , BATTERY		1			
	9	11616504201	CABLE ASSY , BATTERY		1			
	10	11816802300	HARNESS ASSY , EARTH		1			
	10	11816802301	HARNESS ASSY , EARTH		1			

NOTE	

FIG T25NH	LIGHTS	년/월 Year/Month 2021-12

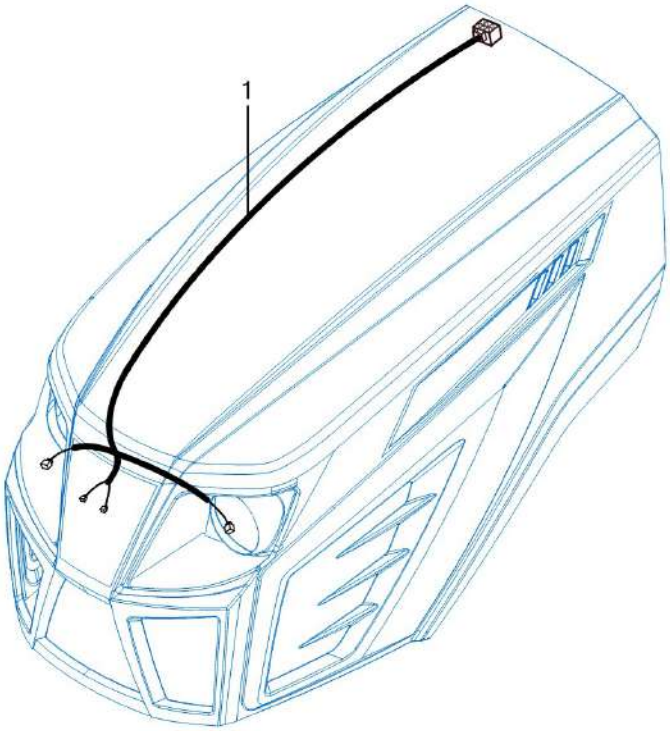

NOTE	

FIG T25NH	LIGHTS	년/월 Year/Month 2021-12

KEY NO		PART NO	DESCRIPTION	SPEC	QTY	REPAIR	EFFECTIVE DATE	REMARKS
	1	11816684000	HARNESS ASSY , HEAD LAMP		1			

NOTE	

FIG T25NH	INSTRUMENT PANEL	년/월 Year/Month 2021-12

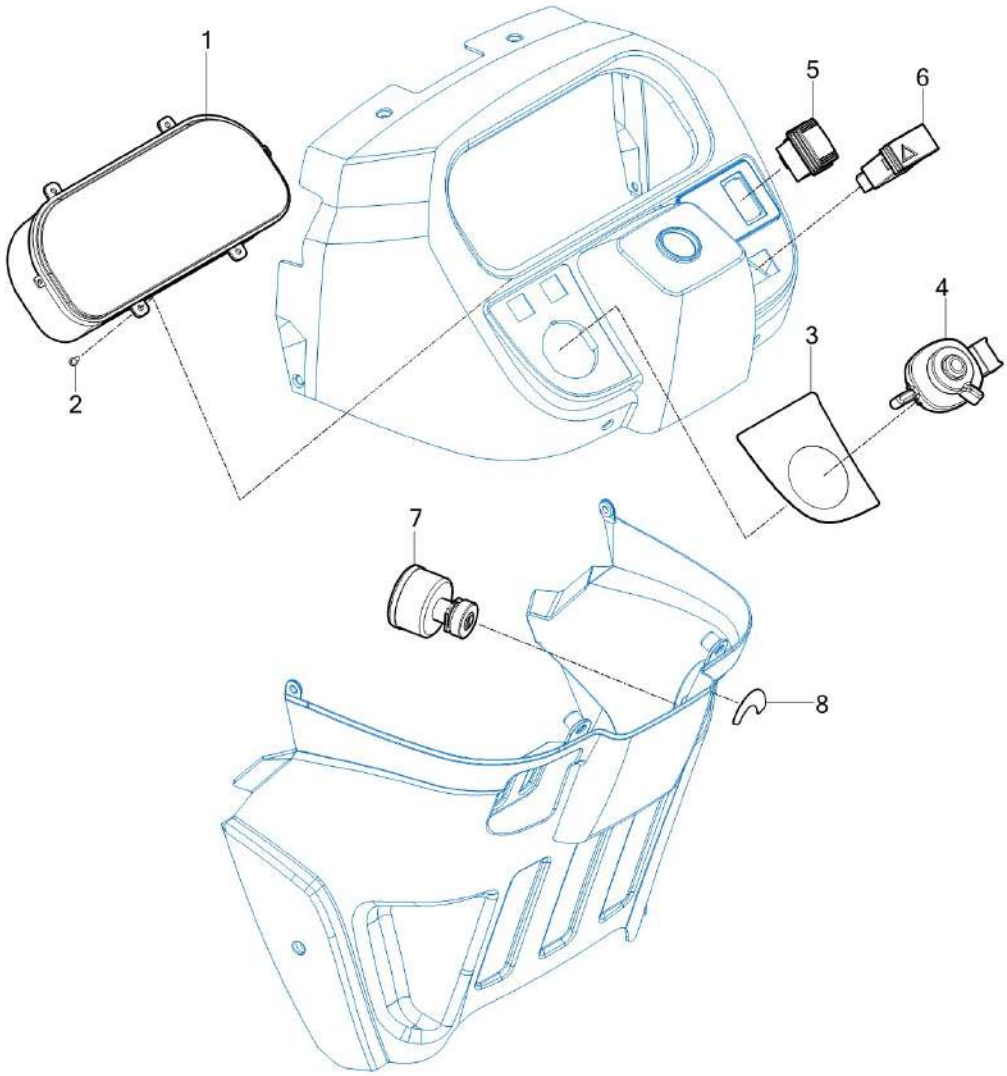

NOTE	

FIG T25NH	INSTRUMENT PANEL	년/월 Year/Month 2021-12

KEY NO		PART NO	DESCRIPTION	SPEC	QTY	REPAIR	EFFECTIVE DATE	REMARKS
	1	11816602101	PANEL ASSY , METER		1			
	2	V1922604016	SCREW , TAPPING		4			
	3	11816030010	LABEL , LH CONTROL		1			
	4	13276642201	SWITCH , COMBI		1			
	5	13156642100	SWITCH , CRUISE		1			
	6	14537072501	hazard SWITCH		1			
	7	14527078702	SWITCH SET,KEY		1			
	8	12127025110	LABEL , STARTER		1			

NOTE	

FIG T25NH	ELECTRIC SYSTEM	년/월 Year/Month 2021-12

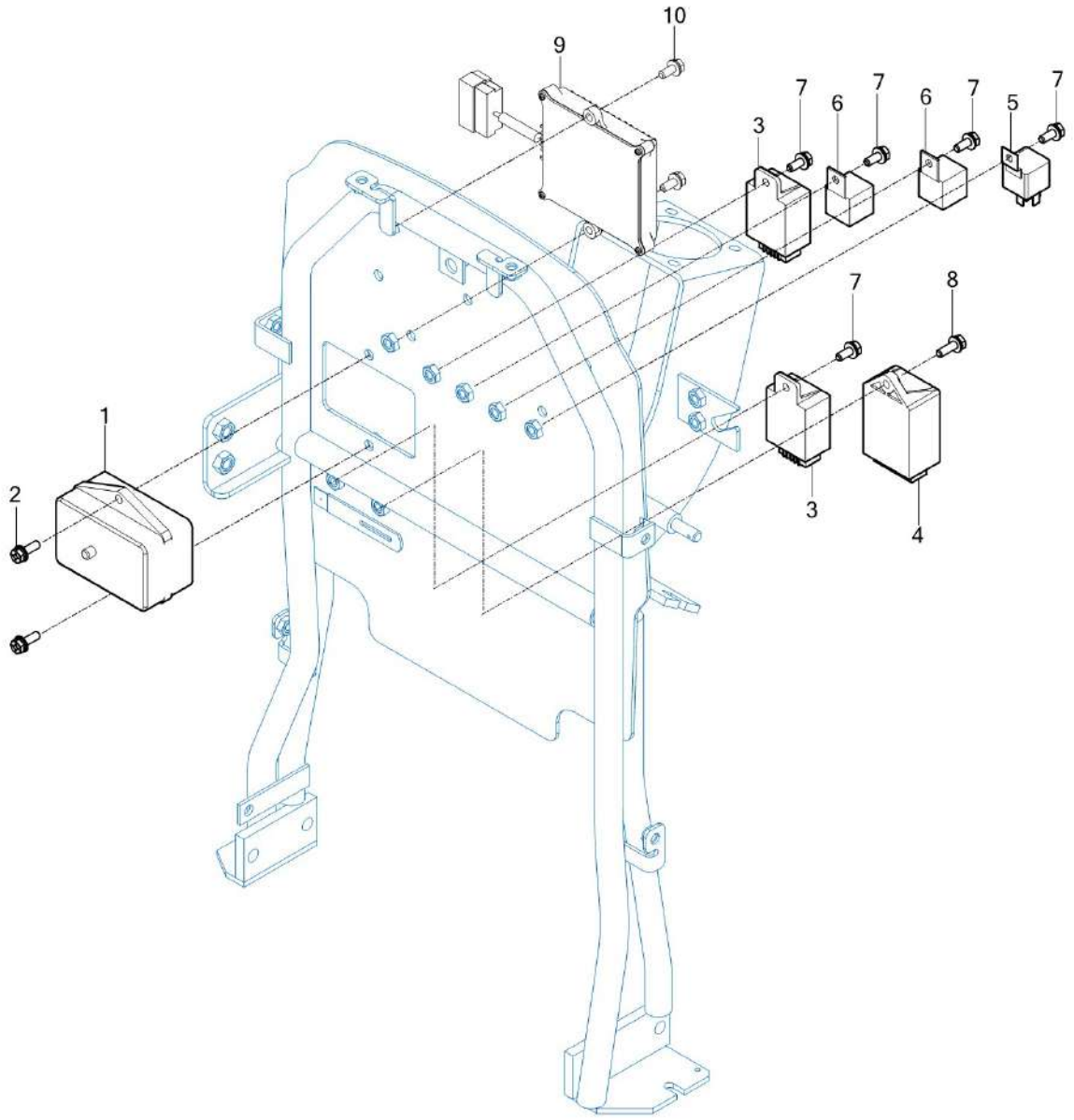

NOTE	

FIG T25NH	ELECTRIC SYSTEM	년/월 Year/Month 2021-12

KEY NO		PART NO	DESCRIPTION	SPEC	QTY	REPAIR	EFFECTIVE DATE	REMARKS
	1	11816642000	CASE ASSY . FUSE		1			
	2	V2323606020	BOLT , C/R HEX/SP		2			
	3	20115300010	RELAY ASSY , TWIN		2			
	4	11466642400	FLASHER ASSY		1			
	5	11616212900	RELAY 5P		1			
	6	17686641110	RELAY , PREHEAT		2			
	7	V2323606016	BOLT , C/R HEX/SP		5			
	8	V2323606020	BOLT , C/R HEX/SP		1			
	9	11816602200	BLUETOOTH MODUEL ASSY		1			
	10	V2323606020	BOLT , C/R HEX/SP		2			

NOTE	

FIG T25NH	HARNESS	년/월 Year/Month 2021-12

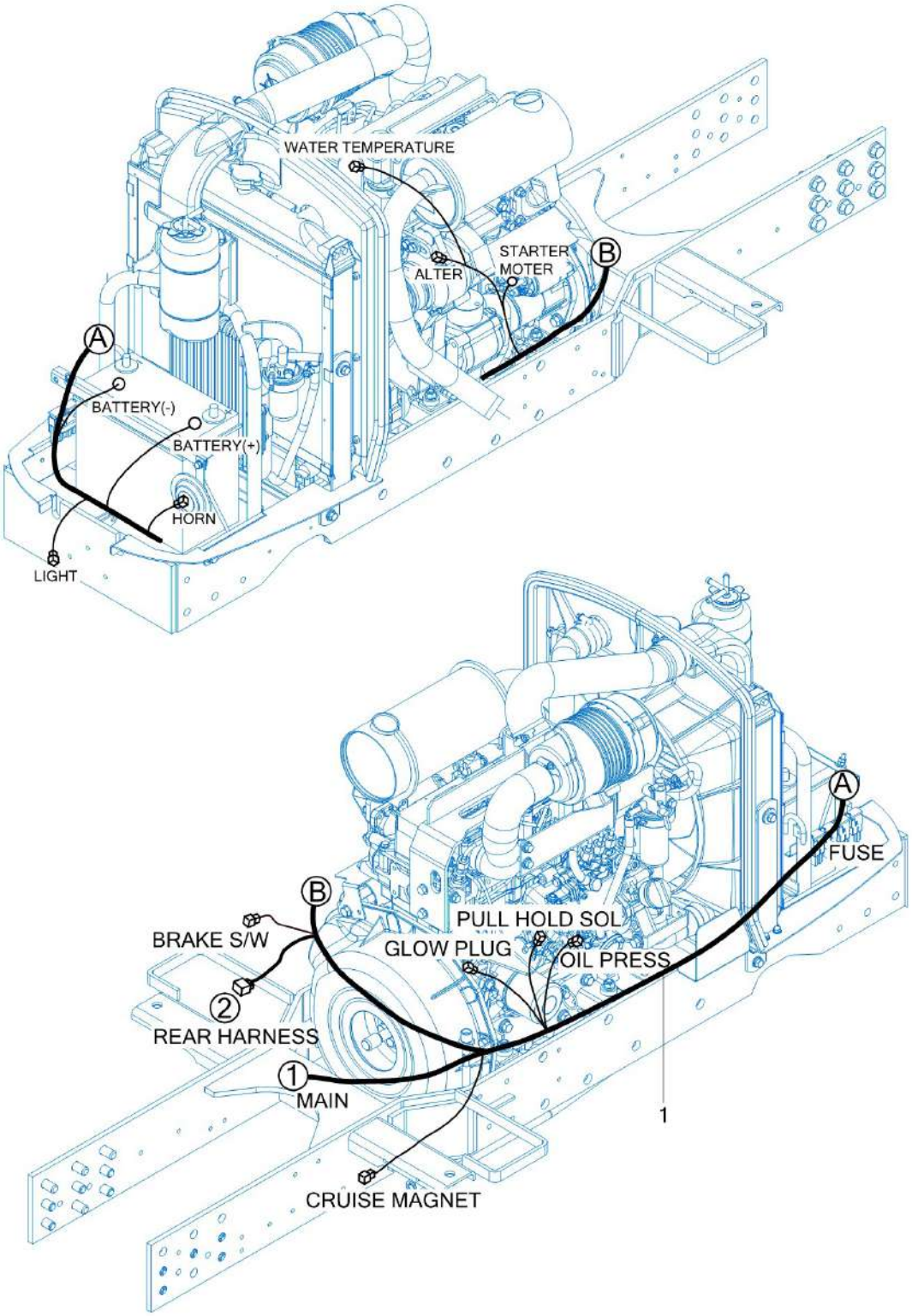

NOTE	

FIG T25NH	HARNESS	년/월 Year/Month 2021-12

KEY NO		PART NO	DESCRIPTION	SPEC	QTY	REPAIR	EFFECTIVE DATE	REMARKS
	1	11816682001	HARNESS ASSY , ENGINE		1			

NOTE	

FIG T25NH	HARNESS	년/월 Year/Month 2021-12

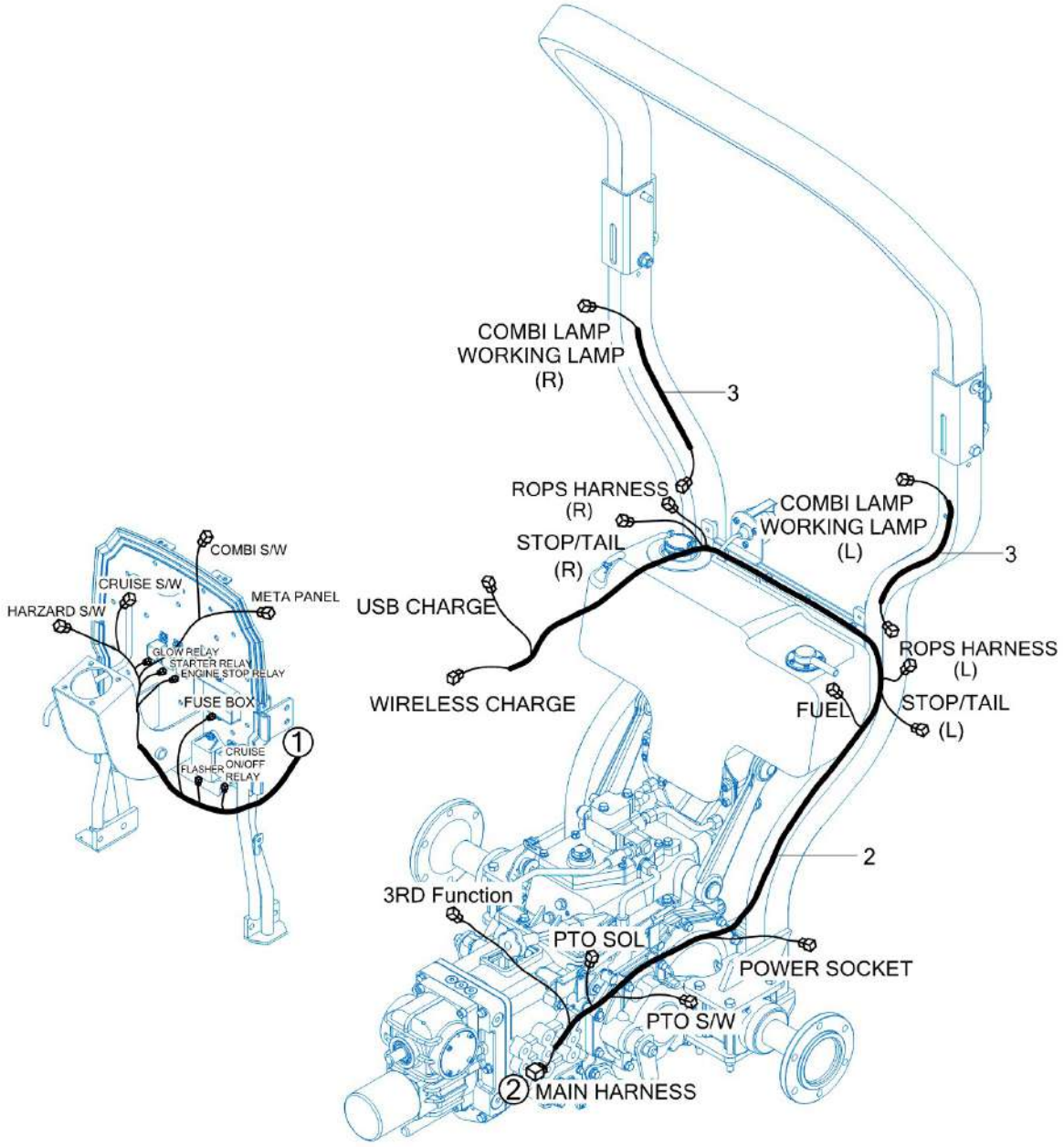

NOTE	

FIG T25NH	HARNESS	년/월 Year/Month 2021-12

KEY NO		PART NO	DESCRIPTION	SPEC	QTY	REPAIR	EFFECTIVE DATE	REMARKS
	2	11816683600	HARNESS ASSY , RR		1			
	3	11816683700	HARNESS ASSY , ROPS		2			

NOTE	

9. Label/Option PART NO. T9

FIG TOOL & ACCESSORY 183
FIG LABEL 185
FIG OPTION 187
FIG MID P.T.O OPTION 189

FIG T25NH	TOOL & ACCESSORY	년/월 Year/Month 2021-12

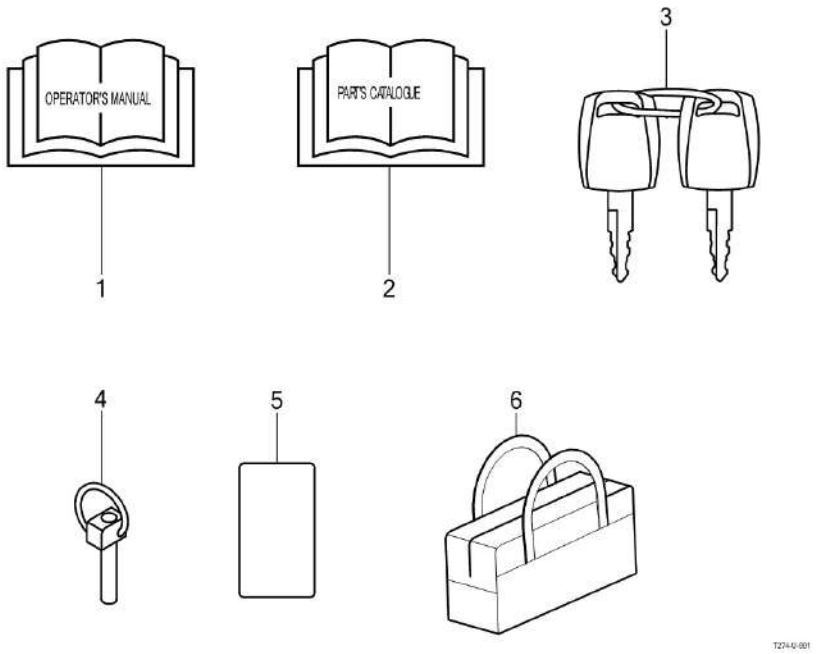

NOTE	

FIG T25NH	TOOL & ACCESSORY	년/월 Year/Month 2021-12

KEY NO		PART NO	DESCRIPTION	SPEC	QTY	REPAIR	EFFECTIVE DATE	REMARKS
	1	11819120020	OPERATOR'S MANUAL , K2X		1			
	2	11819120030	PARTS CATALOGUE , K2X		1			
	3	12147078721	KEY SET		1			
	4	14215020020	PIN , LINK		2			
	5	11506571000	REAR REFLECTOR		2			
	6	94009050020	BAG , ACCESSORY/MIDDLE		1			

NOTE	

FIG T25NH	LABEL	년/월 Year/Month 2021-12

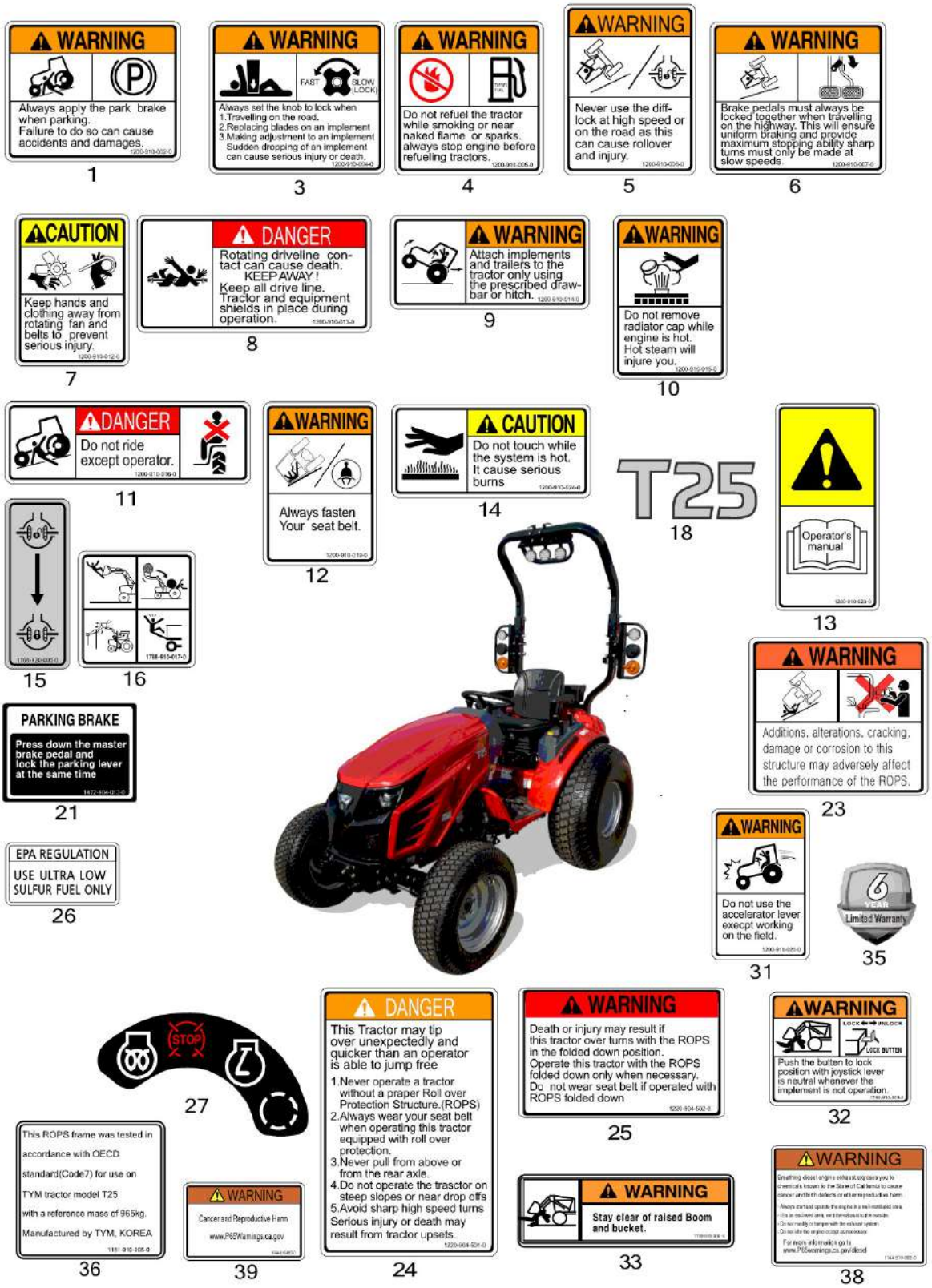

NOTE	

FIG T25NH	LABEL	년/월 Year/Month 2021-12

KEY NO		PART NO	DESCRIPTION	SPEC	QTY	REPAIR	EFFECTIVE DATE	REMARKS
	1	12009100020	LABEL , WARNING PARKING		1			
	3	12009100040	LABEL , WARNING STOP VALVE		1			
	4	12009100050	LABEL , WARNING FIRE		1			
	5	12009100060	LABEL , WARNING DIFF		1			
	6	12009100070	LABEL , WARNING BRAKE		1			
	7	12009100120	LABEL , CAUTION FAN		2			
	8	12009100130	LABEL , DANGER PTO		1			
	9	12009100140	LABEL , WARNING DRAW		1			
	10	12009100150	LABEL , WARNING RADIATOR		1			
	11	12009100160	LABEL , DANGER RIDING		1			
	12	12009100190	LABEL , WARNING BELT		1			
	13	12009100230	LABEL , CAUTION OPERATION		1			
	14	12009100240	LABEL , CAUTION MUFFLER		1			
	15	17689200050	LABEL , DIFF		1			
	16	17689100170	LABEL , CAUTION SAFETY		1			
	18	11819020040	LABEL , MODEL NAME		2			
	21	14729040130	LABEL , CAUTION PARKING		1			
	23	12209045051	LABEL , ROPS WARNING/REMODELING		1			
	24	12209045010	LABEL , ROPS DANGER		1			
	25	12209045020	LABEL , ROPS WARNING		1			
	26	18711201100	LABEL , ULTRA LOW SULFUR		1			
	27	12127025110	LABEL , STARTER		1			
	31	12009100210	LABEL , WARNING THROTTLE		1			
	32	17699100090	LABEL , WARNING JOYSTICK		1			
	33	17699100100	LABEL , WARNING JOYSTICK		1			
	35	13379100150	6YEAR WARRANTY LABEL		1			
	36	11819100050	LABEL , NAME/ROPS		1			
	38	11449100020	LABEL , WARNING/CA P65 A		1			
	39	11449100030	LABEL , WARNING/CA P65 B		1			

NOTE	

12 3rd Function KIT

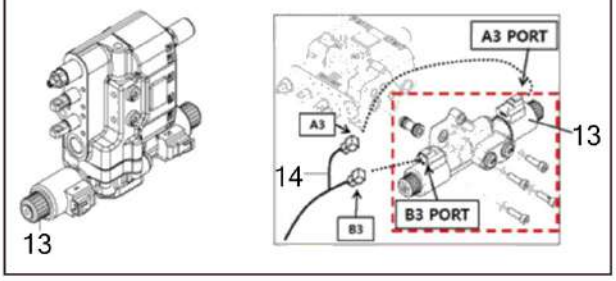

20 Kit Part No.:11817039900

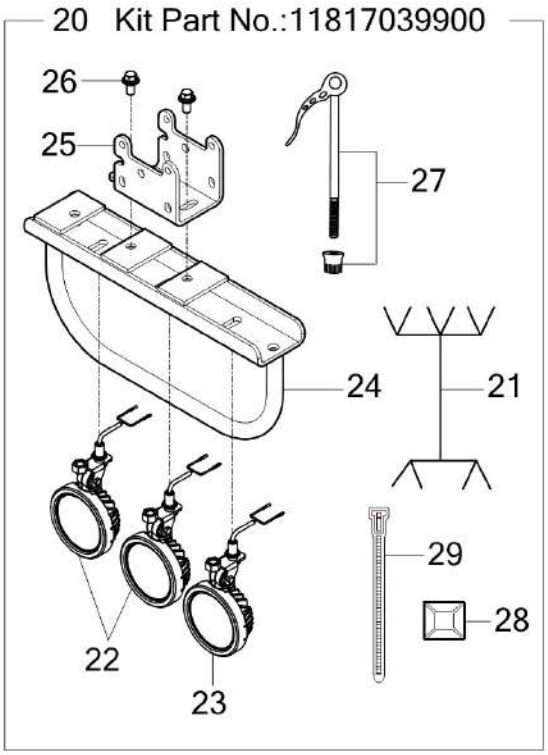

NOTE

FIG T25NH	OPTION	년/월 Year/Month 2021-12

KEY NO		PART NO	DESCRIPTION	SPEC	QTY	REPAIR	EFFECTIVE DATE	REMARKS
	12	11815810000	VALVE KIT , LOADER 6PORT		1			
	13	13877754000	VALVE ASSY , 6PORT		1			
	14	13876683300	HARNESS , 3rd Fn		1			
	20	11817039900	WORKING LAMP KIT		1			
	21	11816683800	HARNESS ASSY , WORKING LAMP (OPTION)		1			
	22	11817025700	LAMP ASSY , WORKING LH		2			
	23	11817025800	LAMP ASSY , WORKING RH		1			
	24	11817122100GB	BRACKET COMP , COMBI LAMP		1			
	25	11817120010GB	PLATE , COMBI		1			
	26	V2183610025	BOLT , HEX/SP	M10X25	2			
	27	11817123100	LEVER ASSY , QR		4			
	28	14536680010	MOUNT , TIE		5			
	29	13764020030	CABLE TIE , 140		5			

NOTE	

FIG T25NH	MID P.T.O OPTION	년/월 Year/Month 2021-12

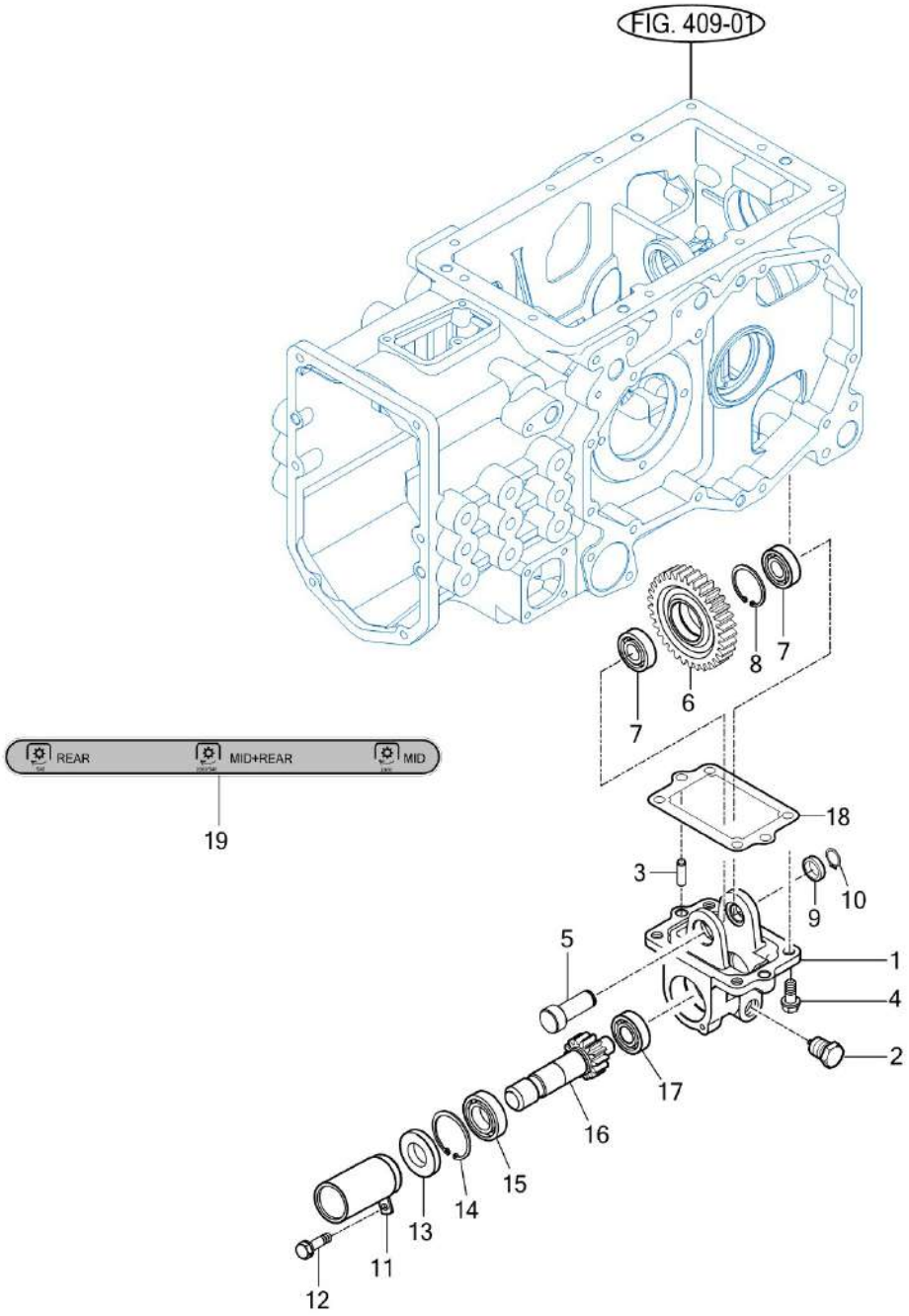

NOTE	

FIG T25NH	MID P.T.O OPTION	년/월 Year/Month 2021-12

KEY NO		PART NO	DESCRIPTION	SPEC	QTY	REPAIR	EFFECTIVE DATE	REMARKS
	0	13152700000	MID PTO KIT		1			
	1	13152700011M	MID PTO CASE		1			
	2	16701015001	PLUG ASSY , DRAIN (MAGNET)		1			
	3	V5201010022	PIN , PARALLEL/A	10X22	2			
	4	V2173610025	BOLT , HEX/S	M10X25	4			
	5	13152710020	SHAFT, MID PTO COUNTER		1			
	6	13152712110	GEAR , SPUR 32T		1			
	7	V6001106203	BEARING , BALL	6203	2			
	8	V7051400400	C-RING , HOLE	40	1			
	9	14722710040	COLLAR , 17X24X6		1			
	10	V7041400170	C-RING , SHAFT	17	1			
	11	14722702100	CAP COMP , MID PTO SHAFT		1			
	12	V2113606012	BOLT , HEX /S	M6X12	1			
	13	V7441254708	SEAL , OIL/D	D25478	1			
	14	V7051400470	C-RING , HOLE	47	1			
	15	V6001106005	BEARING , BALL	6005	1			
	16	13152710010	MID PTO SHAFT		1			
	17	V6001106203	BEARING , BALL	6203	1			
	18	13152401021	GASKET(MID PTO)		1			
	19	13139100040	LABEL(PTO, M+R)		1			

NOTE	