HYDRAULIC SCHEMATIC

4 WHEEL DRIVE

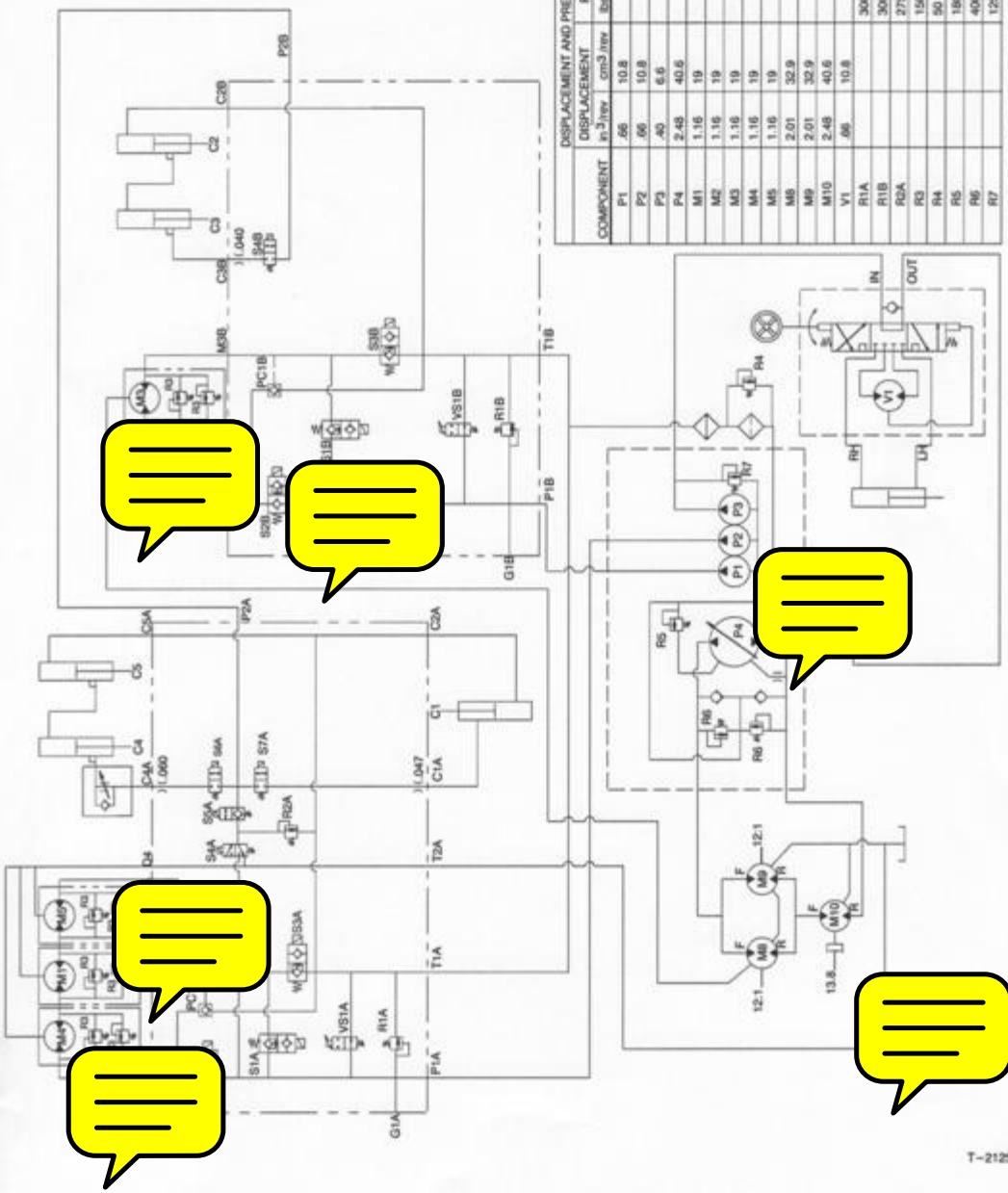

DISPLACEMENT AND PRESSURE CHART						
COMPONENT	DISPLACEMENT		PRESSURE		*FLOW RATE	
	in^3/rev	cm^3/rev	lbs/in.2	BARS	GPM	LPM
P1	.66	10.8			7.0	26.5
P2	.66	10.8			7.0	26.5
P3	.40	6.6			4.2	15.9
P4	2.48	40.6			26.3	99.5
M1	1.16	19				
M2	1.16	19				
M3	1.16	19				
M4	1.16	19				
M5	1.16	19				
M6	2.01	32.9				
M9	2.01	32.9				
M10	2.48	40.6				
V1	.66	10.8				
R1A			3000	207		
R1B			3000	207		
R2A			2750	190		
R3			1500	103		
R4			50	3		
R5			180	12		
R6			4000	276		
R7			1250	86		

*FLOW RATE CALCULATED AT 2500 RPM AND 98% EFFICIENCY.

T-2125B