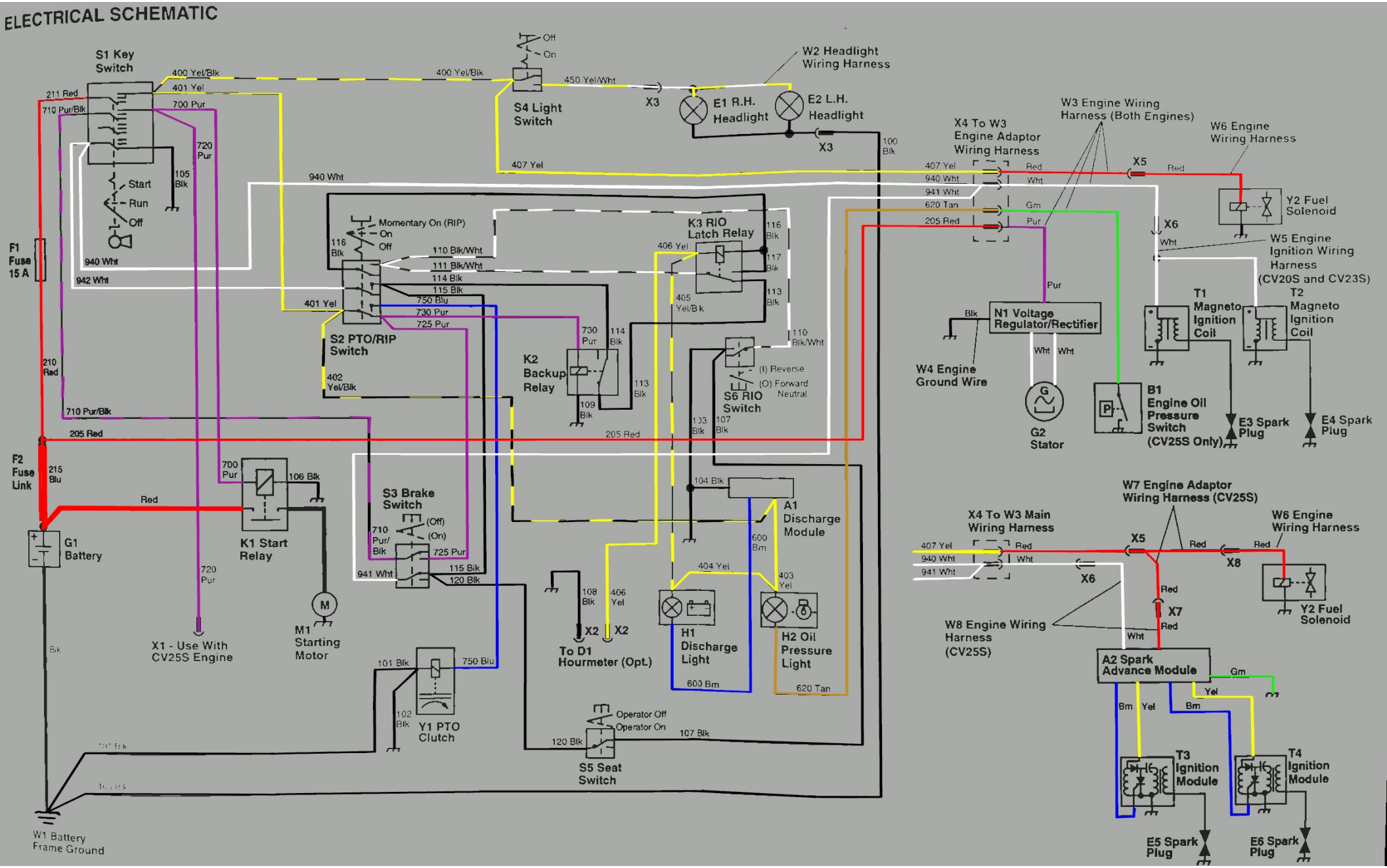ELECTRICAL SCHEMATIC