Gearbox (826-013C) Comer (S/N +)

Applies to RTA1034, RTA1042, RTA1050, RTA1058

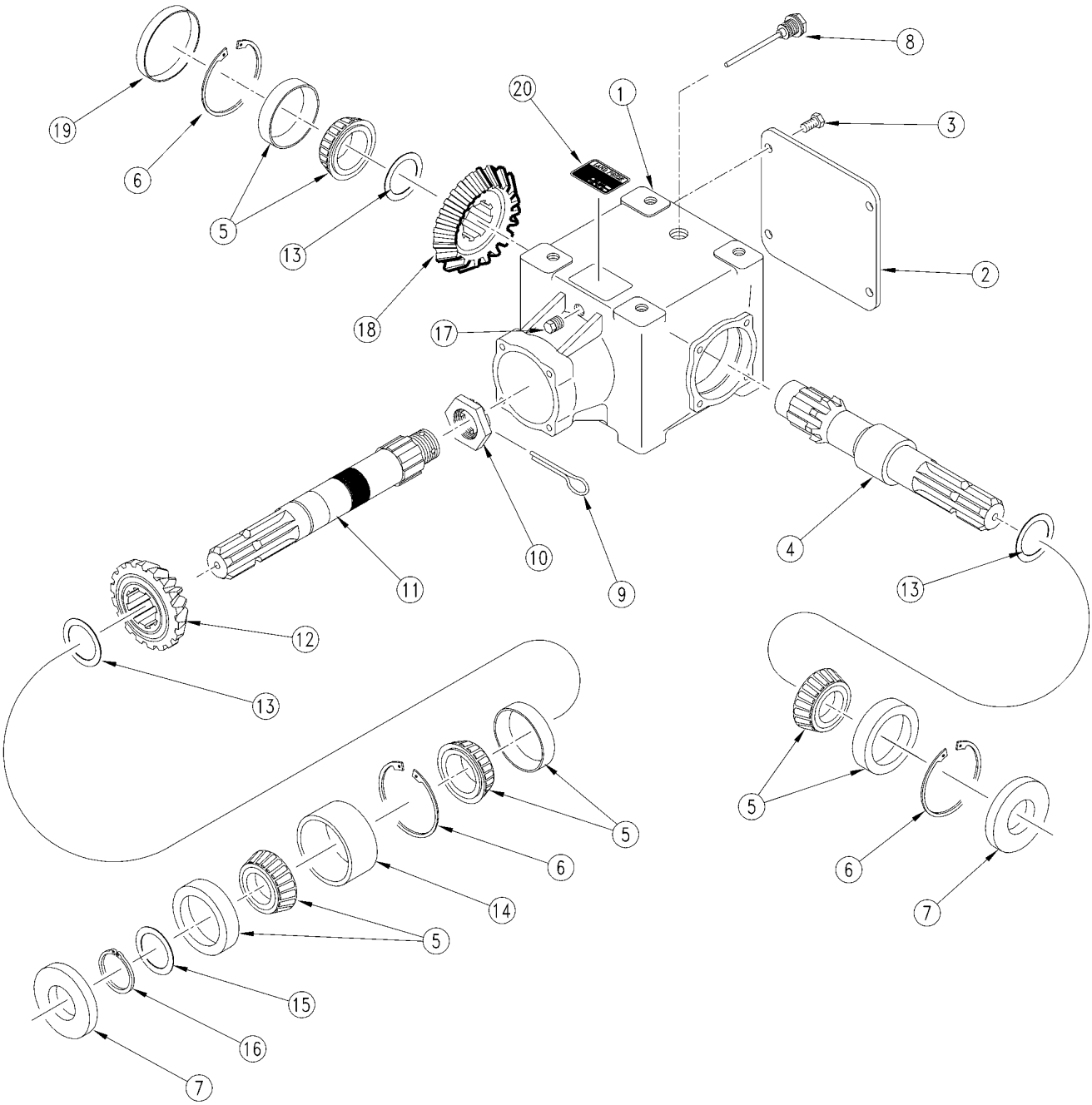

10915