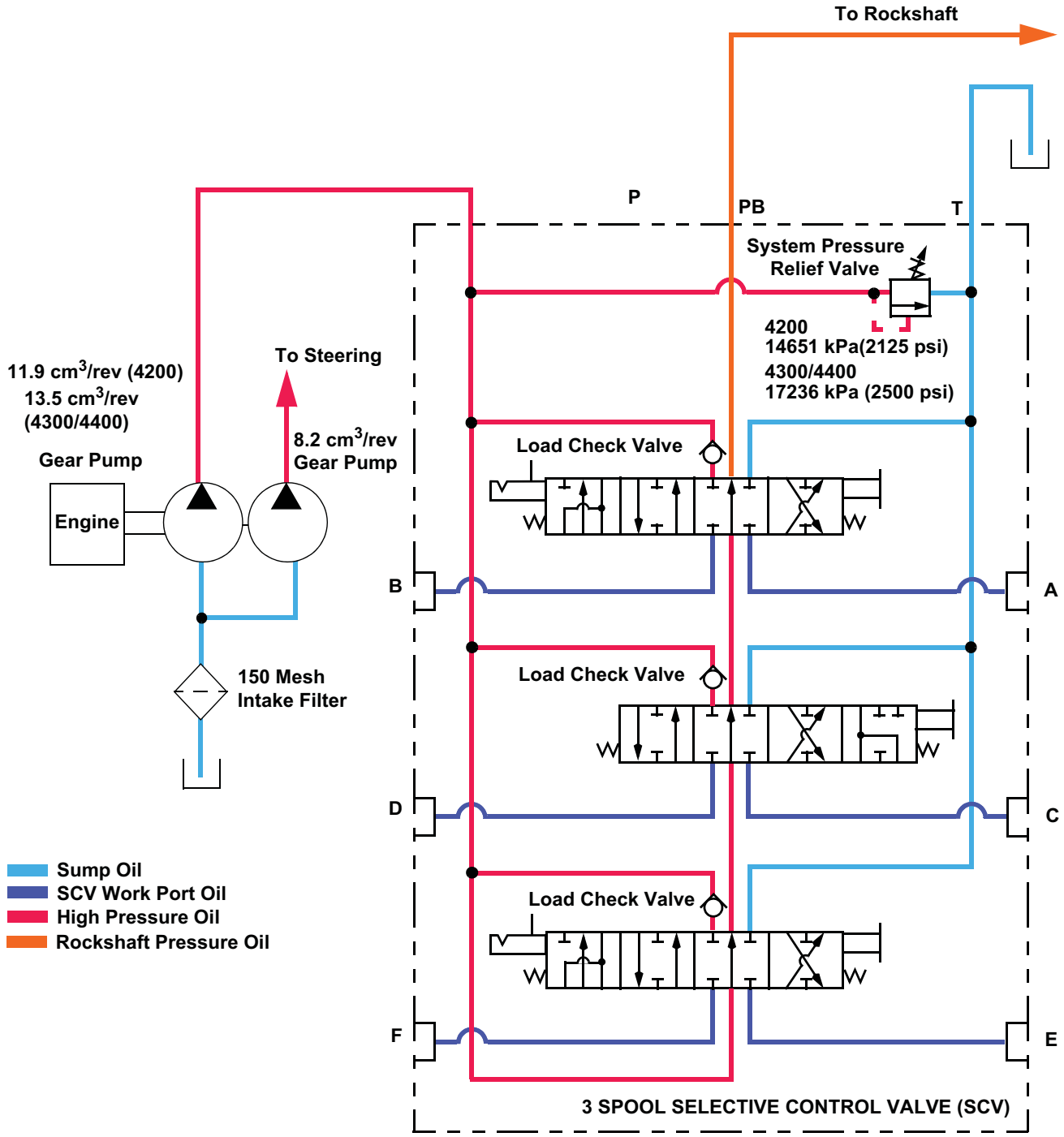3 SPOOL SCV HYDRAULIC SCHEMATIC