FIG. 47 4WD DRIVE GEAR SYSTEM

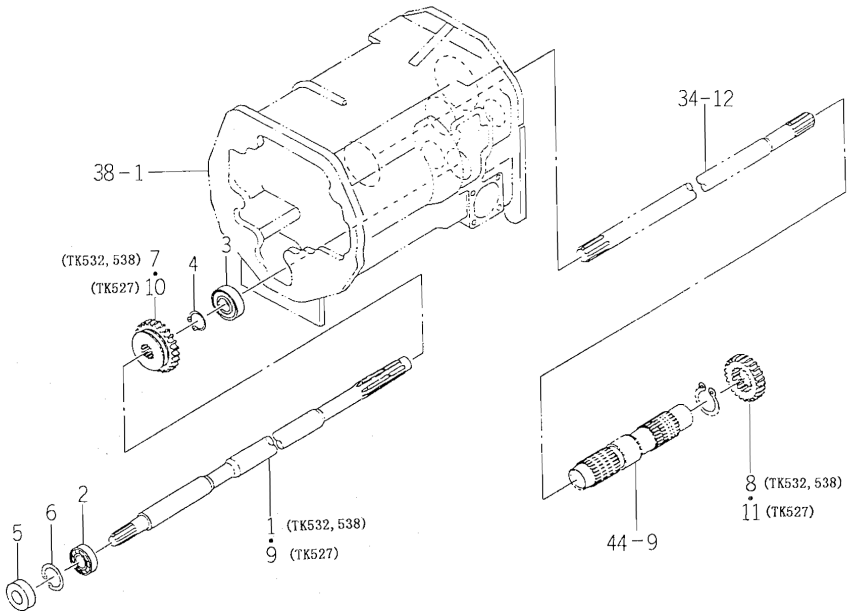

1674-262

KEY	PART CODE	DESCRIPTION	SPC	TYPE OF MODEL TK527	TK532	TK538		ITC	COL	GRP	REMARKS
1	1563-261-003-20	SHAFT	*		1	1					
2	V600-110-600-40	BEARING, RB/6004	*	1	1	1					
3	1564-263-002-00	BEARING, BALL	*	1	1	1					
4	V704-140-025-00	RING, SNAP/25 C	*	1	1	1					
5	V744-120-420-80	SEAL, OIL/TC20428	*	1	1	1					
6	V705-140-042-00	RING, SNAP/42 C	*	1	1	1					
7	1594-262-001-10	GEAR, SPUR/23	*		1	1					
8	1595-262-002-10	GEAR, SPUR/24	*		1	1					
9	1561-261-002-10	SHAFT	*	1							
10	1640-262-001-00	GEAR/SPUR/24	*	1							
11	1640-262-002-00	GEAR/SPUR/24	*	1							

FIG. 48 4WD CHANGE SYSTEM

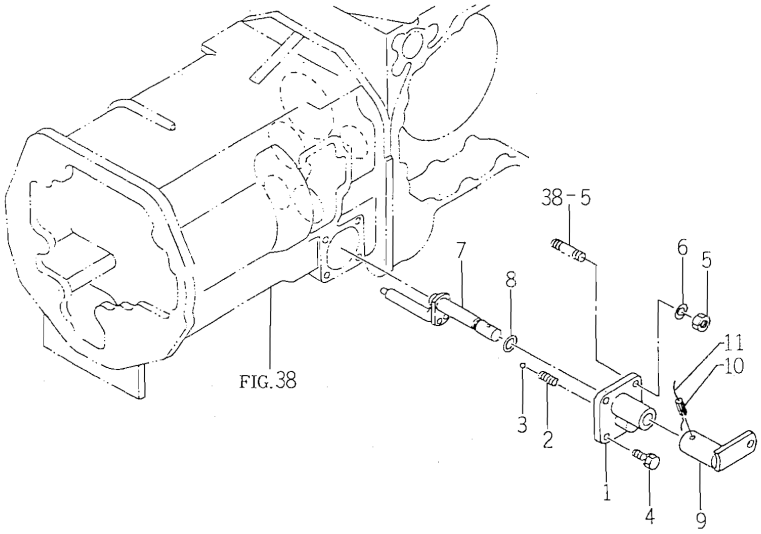

1594-265

KEY	PART CODE	DESCRIPTION	SPC	TYPE OF MODEL TK527	TK532	TK538		ITC	COL	GRP	REMARKS
1	1560-265-002-10	HOUSING	*	1	1	1					
2	1302-225-003-00	SPRING, SHIFTER	*	1	1	1					
3	V682-200-001-00	BALL	*	1	1	1					
4	V211-260-802-00	BOLT, SEMS (S)	*	2	2	2					
5	V304-260-008-00	NUT/M 8	*	2	2	2					
6	V401-160-008-00	WASHER, SP/M 8	*	2	2	2					
7	1560-265-220-20	ARM COMP	*	1	1	1					
8	V720-102-401-40	O-RING/P14	*	1	1	1					
9	1594-265-210-00	ARM, PLATE COMP	*	1	1	1					
10	V580-140-602-50	PIN, SPRING/6 X25 W	*	1	1	1					
11		WIRE	*	1	1	1					