1. WIRING DIAGRAM

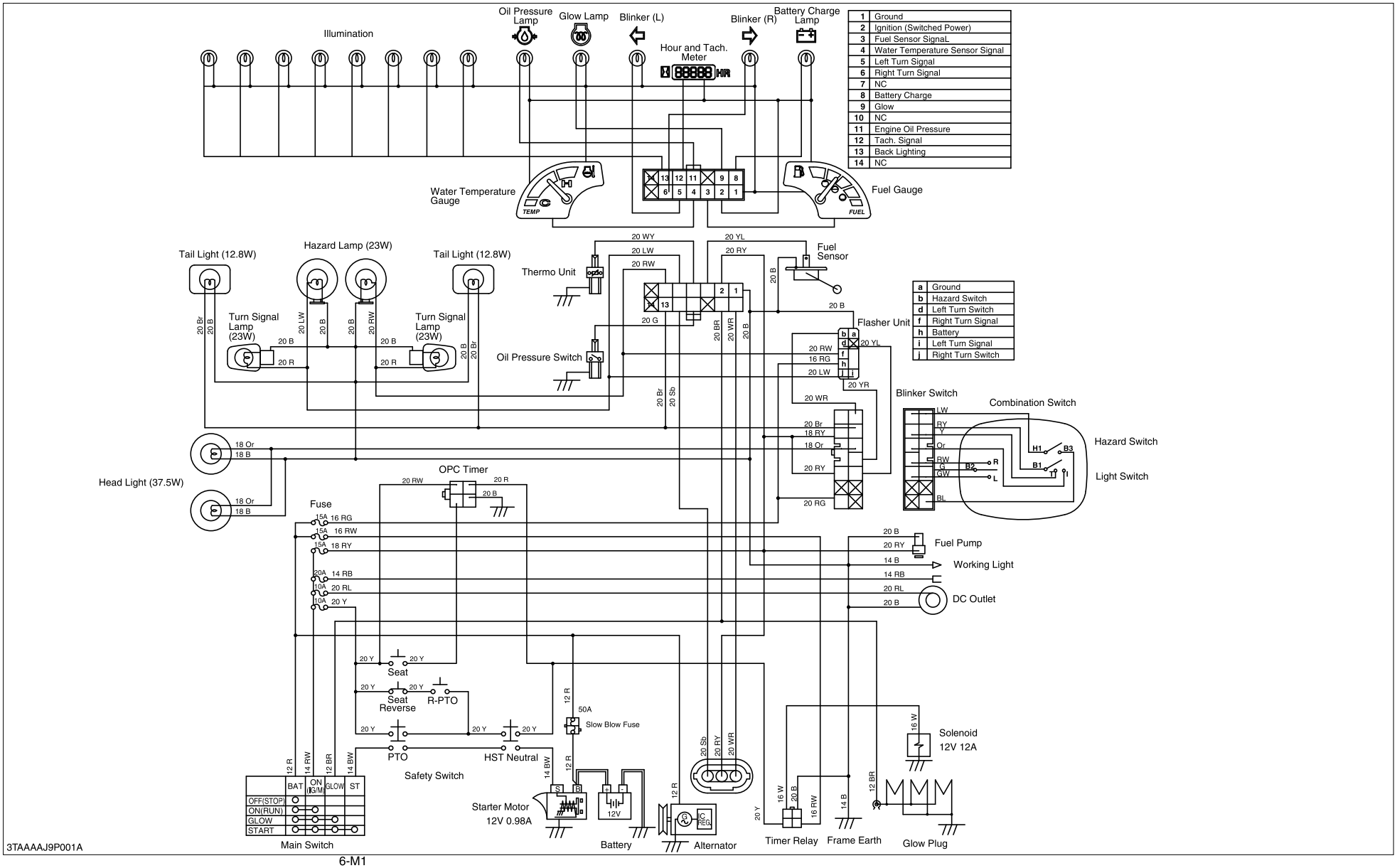

1	Ground
2	Ignition (Switched Power)
3	Fuel Sensor SignaL
4	Water Temperature Sensor Signal
5	Left Turn Signal
6	Right Turn Signal
7	NC
8	Battery Charge
9	Glow
10	NC
11	Engine Oil Pressure
12	Tach. Signal
13	Back Lighting
14	NC

a	Ground
b	Hazard Switch
d	Left Turn Switch
f	Right Turn Signal
h	Battery
i	Left Turn Signal
j	Right Turn Switch