FIG S111 3510h	HYD CONTROL	Year/Month 2016/07

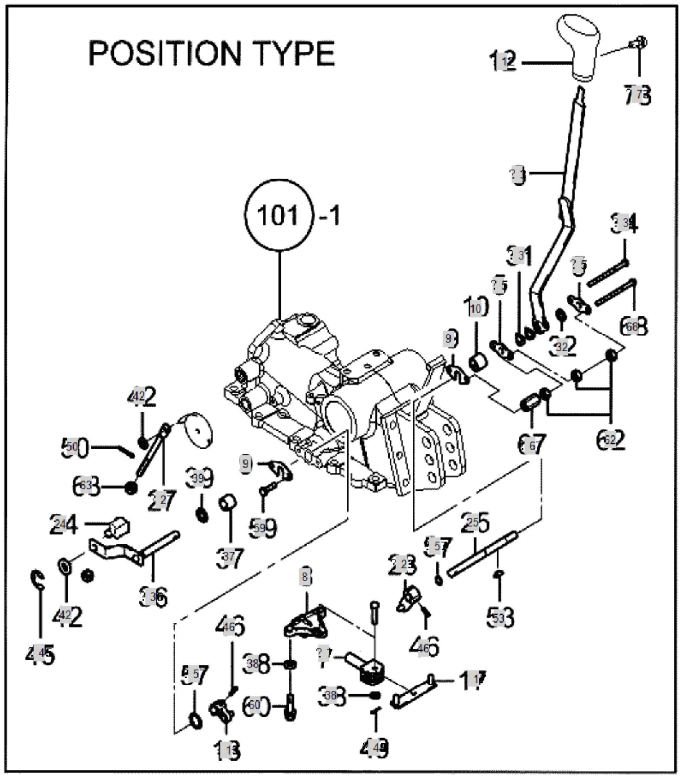

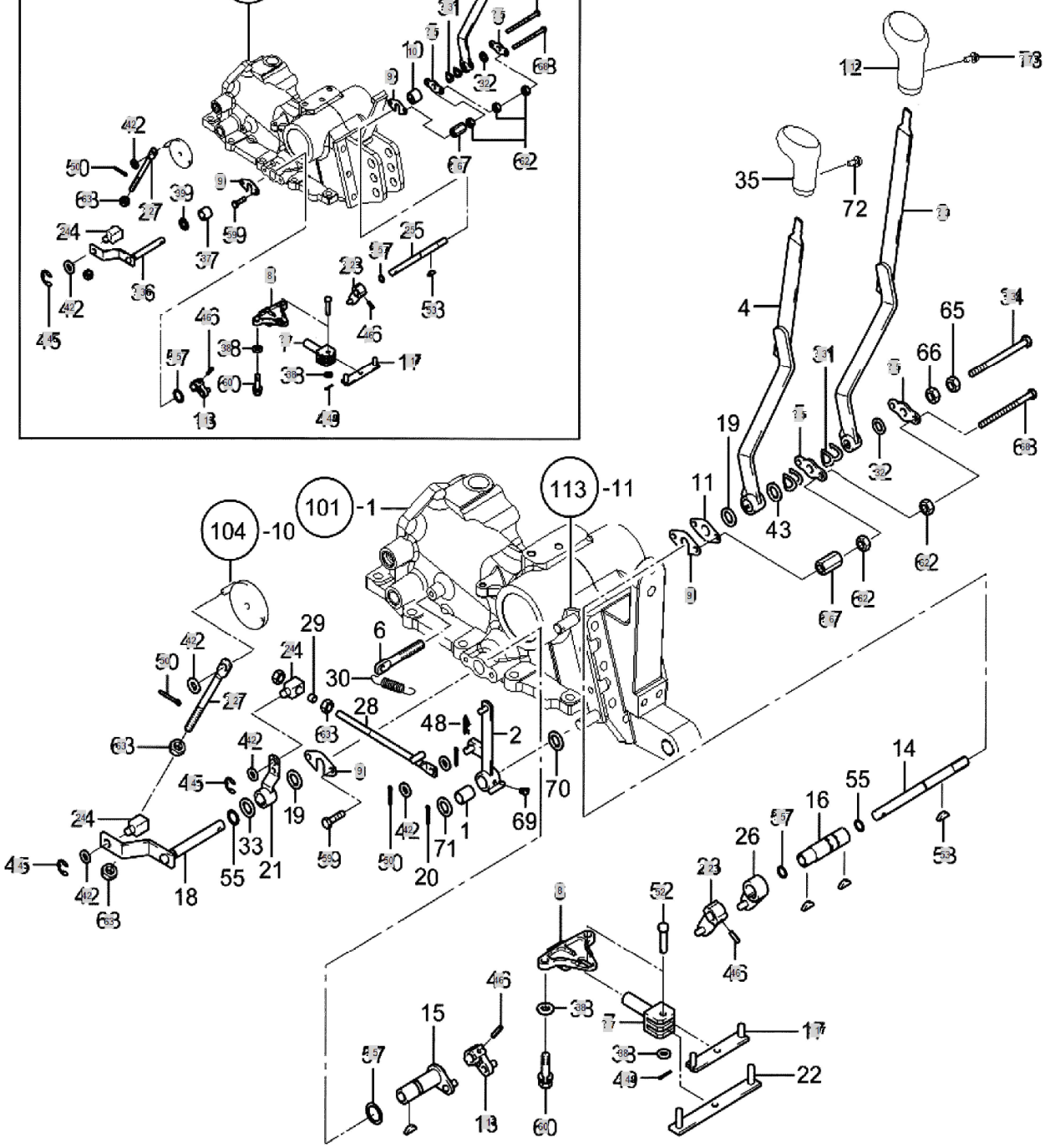

FIG S111 3510h	HYD CONTROL	Year/Month 2016/07

KeyNo.	Part Number	Part Name	Quantity	Other
I 3	TA00001047B	LEVER, P-CONTROL	1	
I 5	TTB1050000A4	PLATE	2	
I 7	TTB1070000A4	RODCONTRDL	1	
8	TTB1080000A3	PLATECONTRDL	1	
9	TTB1090000A4	PLATEA	2	
10	TZB1040000A4	COLLAR	1	
I 12	TA00015831A	KNOB, POSITION CONTROL	1	
I 13	TTB1130000A4	ARM(PCF)	1	
I 17	TTB1170000A4	BAR,DRAFTCONTROL	1	
I 23	TTB1230000A4	ARM,POSITIONCONTROL	1	
24	TTB1240000A4	ADJUSTER	1	
25	TZB1140000A3	SHAFT	1	
I 27	TTB1270000C3		1	
I 31	TT01140000A4	SPRINGWASHER	2	
32	TTB1320000A4	PLATE,FRICTION	1	
I 34	26116-080802	BOLTM8X80	1	
I 36	TZB1180000A3	FEEDBACK ARM	1	
37	TZB1210000A4	COLLAR	1	
38	22137-080000	WASHER, PLAIN (Φ 08)	3	
39	TZB1330000A4	PLATE	1	
42	22137-100000	WASHER, PLAIN (Φ 10)	2	
I 45	22272-000070	RING, CIRCLIP (Φ 07)	1	
46	22351-050032	PIN, SPRING (5-03)	2	
I 49	22417-200200	PIN , COTTER (2-20)	1	
50	22417-300200	PIN , COTTER (3-20)	1	
52	22487-080350	PIN, HEAD (08-35)	1	
53	22522-030130	KEY, WOODRUFF (03-13)	1	
I 57	24311-000160	O-RING, DYNAMIC (Φ16)	2	
59	26013-080162	Bolt, Hexa (8-16)	2	
60	26013-080202	Bolt, Hexa (8-20)	2	
62	26716-080002	NUT,HEX (D8)	3	
63	26716-100002	Nut, Hexa (Φ10)	2	
I 67	TTB1670000A4	NUT	1	
68	26116-080804	HEXAGONBOLT	1	
I 73	26023-040162	SCREW	1	
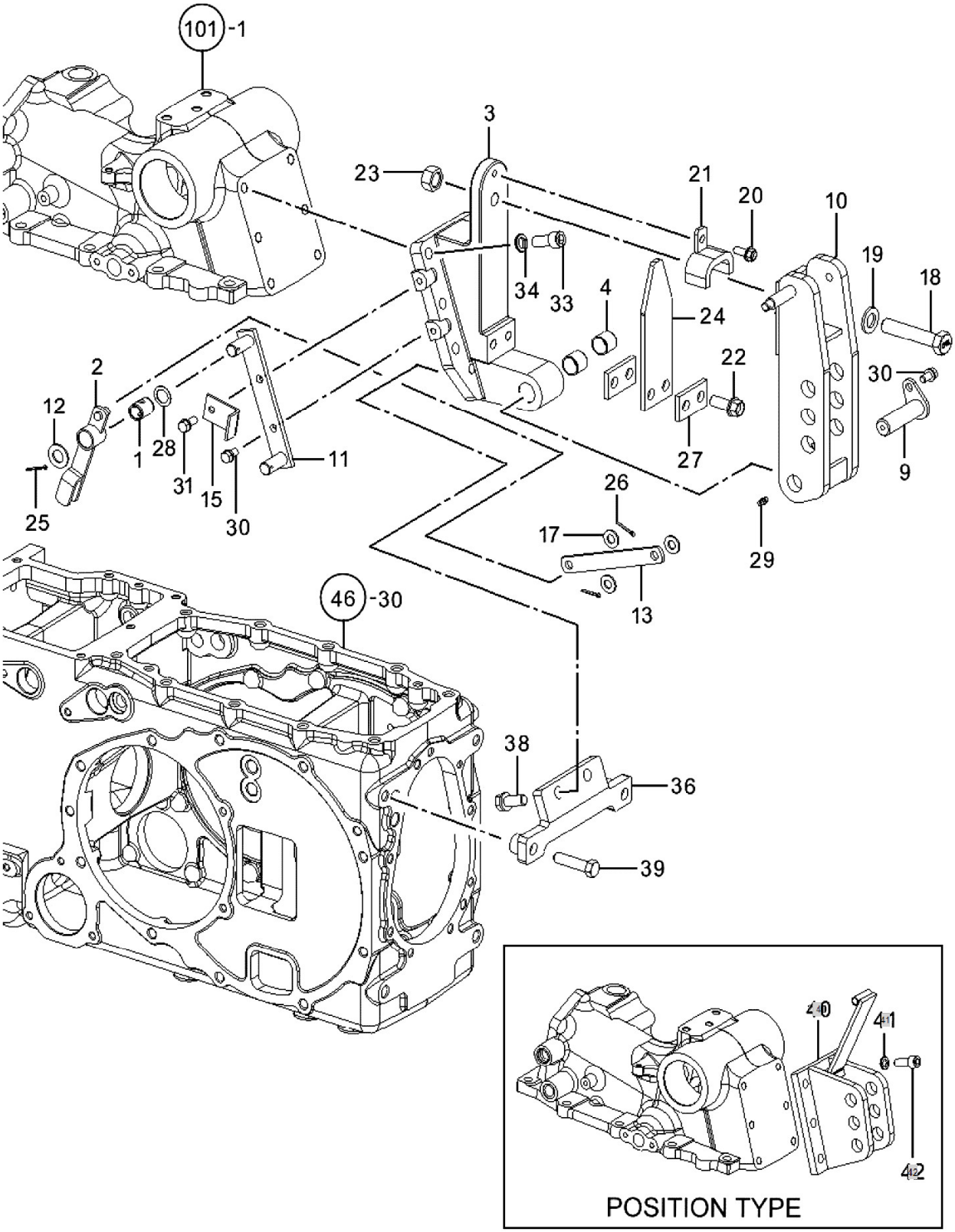
FIG S113 3510h	DRAFT CONTROL	Year/Month 2016/07