## 5210—5510 Electrical Schematics and Legend (Tractors Without Cab)

LV2220 –UN–10JUL02

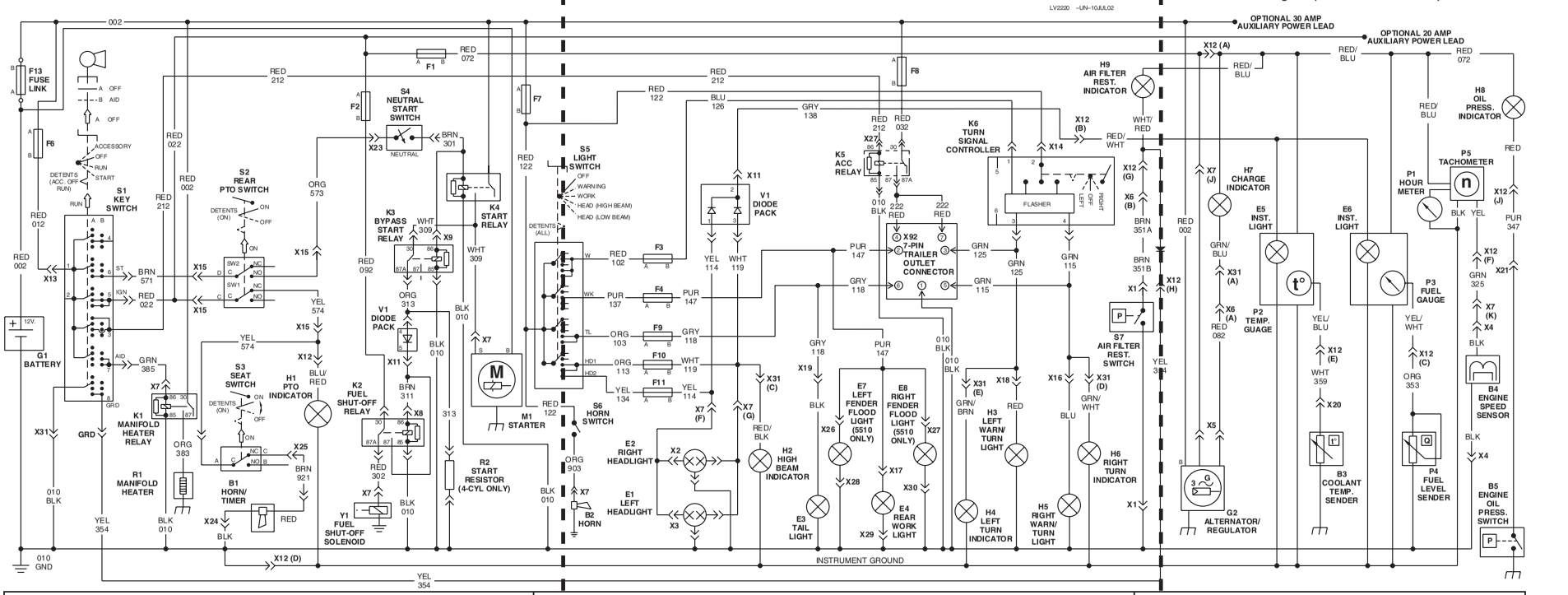




See Page 240-20-4 A

See Page 240-20-4 B

See Page 240-20-4 C